January 2012

A Statically Balanced Shape-Shifting Surface

Joseph Eugene Pishnery
University of South Florida, jpishney@mail.usf.edu

A Statically Balanced Shape-Shifting Surface

by

Joseph E. Pishnery

A thesis submitted in partial fulfillment
of the requirements for the degree of
Master of Science in Mechanical Engineering
Department of Mechanical Engineering
College of Engineering
University of South Florida

Major Professor: Craig Lusk, Ph.D.
Daniel Hess, Ph.D.
Kyle Reed, Ph.D.

Date of Approval:
March 19, 2012

Keywords: Compliant Mechanism, Static Balancing,
Peaucellier Lipkin Linkage, Flexural Pivots, Virtual Work

DEDICATION

Many individuals have made a positive impact on my education. First and foremost, I would like to dedicate this thesis to my mother, Darline, and my father, Vincent, who have always been supportive both financially and emotionally, and have always been a guiding light. Also to my brother, Vincent, his wife, Alicia, and their children, Ethan, Andrew and Arabella for their unwaning support and teaching me the finer points of life. To my girlfriend Melanie Warzala, who kept me sane throughout performing this research. Your enthusiasm and positive support have helped me through difficult times and it is, and always will be, a pleasure to find retreat in your company.

I would also like to dedicate this thesis to my friends, Stephen, Chadd, Laura, Jeff, Eddie, Emma and Antonios, for your support and ability to provide a haven for me to relax. I also dedicate this to the managerial staff and my co-workers at Quality Custom Distribution and Barnett Outdoors for their adamant support and flexibility with my work schedule to allow me to complete my education.

Finally, I would like to thank our Heavenly Father for the courage and spirit to try to make a positive impact on people's lives through my research. Your infinite blessings have paved my path.

ACKNOWLEDGEMENTS

I would like to primarily acknowledge Dr. Craig Lusk for teaching me compliant mechanism theory and its applications. Dr. Lusk also serves as my thesis advisor and has offered an incredible amount of support, ideas, and feedback. He also offered the necessary equipment and supplies needed to produce the prototypes. Without him, this research would not be possible.

I would also like to acknowledge Mr. Paul Montalbano and Mr. Brian Gassaway for their help in producing prototypes and equipment training. As members of Dr. Lusk's research team, they were also supportive educationally because of their knowledge of compliant mechanisms and general engineering.

Furthermore, the following people have made much appreciated contributions. Melanie Warzala and Chadd Brown have helped proof-read the thesis to ensure completeness and proper grammar were followed. Dr. Daniel Hess and Dr. Kyle Reed serve as my committee members and their feedback has been crucial to producing this thesis. I would also like to acknowledge faculty and staff of the Department of Mechanical Engineering at the University of South Florida for their infinite wisdom, professionalism and education they have provided me during my tenure as a student.

TABLE OF CONTENTS

LIST OF TABLES

LIST OF FIGURES

ABSTRACT

This paper presents a concept for producing a Statically Balanced Shape-Shifting Surface (SB-SSS). In this context, an SB-SSS is a surface that can require near-zero magnitude force changes to accomplish a change in shape while retaining effectiveness as a physical barrier. This paper focuses on how to statically balance a specifically-designed compliant mechanism and how to incorporate this mechanism into a polygonal cell.

The mechanism consists of a compliant Peaucellier-Lipkin linkage layered with a pre-stressed link as the balancer. Previous work is presented that can show how a polygonal cell can be incorporated into a surface via a tiling array. Specifically shaped overlapping thin plates are used to retain the physical barrier requirement. The demonstration of a virtually zero-force Shape-Shifting Surface (SSS) suggests that SSS's can be designed with a wide range of force-displacement properties, i.e. ranging from that of a square of the parent material to the zero-force mechanism presented here. Applications for an SB-SSS may be macro-scale or micro-scale and may include sensors, biomedical applications, defense applications, and variable stiffness materials.

CHAPTER 1: INTRODUCTION

The first known use of the word shape-shifter was in 1887 and is defined as "one that seems able to change form or identity at will" (1). The typical use of this word is common in mythology and fairy tales, having to do with an apparent reconfigurable and adaptable change in a person, creature or entity. The concept for a Shape-Shifting Surface was proposed by Lusk and Montalbano (2).

Shape-Shifting Surfaces offer the potential for a user to manipulate a surface to any desired shape. Moreover, the surface should retain its ability to function as a physical barrier before, during, and after shape changes are performed. Potential applications for this new technology are vast, from biomedical to national defense applications and on nearly any scale. The surfaces could be used in any situation that requires motions such as, but not limited to, shrinking, expanding, constricting or pumping. Shape-shifting surfaces may also be used to conform to an existing shape to replicate surface contours to control fluidic motion. Passive behaviors may also be created in Shape-Shifting-Surfaces that do not require any actuation.

The basic concept presented in this thesis will use unit cells with carefully designed compliant segments in combination with rigid segments.

The compliant segments use the elasticity of the material in conjunction with specifically designed geometry to control motion while retaining the physical barrier requirement. This requirement allows for the material to be non-permeable in situations where fluids are controlled. The cells would be tiled in an array such that each cell could be controlled independently, allowing any desired motion for the entire surface. The control and actuation system may be electronic in nature but will not be discussed in detail because it is out of scope for this thesis and is a topic for future research.

A drawback of compliant mechanisms is the storage of energy in the flexible segments (3). The energy stored in a flexible segment undergoing deflection is a natural phenomenon encountered when a material is loaded within the elastic limit of its deflection. In certain situations, this storage of energy is undesirable because a certain amount of energy is required to maintain the state of deflection. The energy storage encountered during deflection in unavoidable for a single flexible segment, therefore it must be balanced with a system to result in a zero net energy storage.

Statically balanced mechanisms are mechanisms on which the forces of one or more potential energy storage elements are acting, such that the mechanism is in static equilibrium throughout its range of motion, even without friction (3). Therefore, each cell would need a constant force applied by an actuator to maintain its shape if the static balancing condition is not met. Static balancing can reduce the need for a constant actuation force and is thus apt for energy-efficient systems.

1.1 Objective

The purpose of the research is to provide a basis for a Statically Balanced Shape-Shifting Surface composed of multiple tiled cells. Each cell will be statically balanced to reduce power draw on the control system when the shape changes. This method also allows for zero force input for maintaining a specific shape and minimal actuation force to move the unloaded system. At the time of publishing, this idea has never been formally presented.

The first objective was to create a single side of the unit cell to demonstrate static balancing. Compliant mechanisms were employed due to their reduced cost of manufacture, reduced wear and reduced friction characteristics. This was accomplished by using the method of statically balancing compliant mechanisms. While no formal method is published in textbooks, ASME conference papers have presented various views on how this condition may be met. The use of these papers was instrumental in the development of this thesis. An appropriate mathematical derivation was created to allow for the design of the unit cell.

The unit cells may be designed in various shapes including squares, rectangles and triangles. Macro sized prototypes are constructed from uniform thickness polypropylene sheets using a CNC laser cutter. The size of the prototypes is meant to act as a visual representation of what may be possible. Appropriate scaling of the prototypes should yield similar results for various sizes of finished products from the micro-scale to large structures.

Future work would necessitate the use of micro scale manufacturing to create a pixelated sheet. By reducing the size of the individual unit cells, the sheet could be created as a "cloth-like" material. The control and actuation system will also need to be introduced and may be similar in nature to the digital mircomirror device found in Digital Light Processing (DLP™) devices.

1.2 Motivation

The motivation behind the research is to enhance the safety and welfare of the general public while fostering future innovation amongst researchers in academia and industry. The ability to change the shape of a surface may have a profound impact on the public that would certainly increase the quality of life in situations where this technology can be applied.

Multiple applications for Shape-Shifting-Surfaces can be conjectured after careful intellectual imagination. These applications may include but are certainly not limited to the fields of medicine, sensors, control surfaces, exoskeletons, variable stiffness materials and variable textured surfaces. All of these potential applications may provide fascinating innovation on a scale similar to the semiconductor revolution of the mid-20th century.

Some medical applications may eventually include artificial muscles for patients with dilated cardiomyopathy, muscle atrophy and accidental injury. Replacement of the cardiac striated muscle of patients with dilated

cardiomyopathy could prolong the life of individuals with this disease. "Dilated cardiomyopathy is a common and largely irreversible form of heart muscle disease with an estimated prevalence of 1:2500. It is the third most common cause of heart failure and the most frequent cause of heart transplantation (4)." Muscle atrophy is a decrease in muscle tissue resulting from diseases such as AIDS, cancer, liver failure and congestive heart failure. A common form of Muscle Atrophy is Spinal Muscle Atrophy (SMA), which is a commonly inherited disorder. "The mortality and/or morbidity rates of spinal muscular atrophy are inversely correlated with the age at onset. High death rates are associated with early onset disease. In patients with SMA type I, the median survival is 7 months, with a mortality rate of 95% by age 18 months (5)". Muscle replacement can also increase the well-being and quality of life for people injured in various accidents requiring the need for muscle removal.

Sensors offer another great potential use for Shape-Shifting-Surfaces that are statically balanced. Macro pressure sensors can use statically balanced Shape-Shifting-Surfaces because the amount of friction within the system can be at or nearly zero. This can increase accuracy and reduce measurement error. By reducing the amount of loss within the sensor, new mechanical style load cell sensors may also be created using this technology. Alternatively, this could be used specifically to enhance or modify diaphragm/membrane constructed types of load sensors and may have further positive effects on pancake and bending beam load sensors.

Control surfaces are surfaces that cause a convergence or divergence of a control volume by when a flux occurs. Practical applications of control surfaces are flight surfaces on aircraft such as ailerons, elevators, flaps and the rudder. A single piece wing design where the shape of the wing could be changed may allow for the incorporation of those surfaces without need of separate actuations. This would greatly simplify wing design and may allow greater control over the aircraft's performance. The overall power requirement may also be reduced over current hydraulic actuation systems.

Exoskeletons are a common feature in terrestrial invertebrates. The purpose of the exoskeleton can be to provide protection, support and sensing abilities to an organism. Looking past current biological applications, it is not difficult to envision the use of an exoskeleton to provide protection, support and sensing abilities to human workers whose occupation is nested in a hazardous environment. Powered exoskeletons are not a new idea, the first of which was developed in a joint venture between the United States military and General Electric during the 1960's. The project was unsuccessful due to the systems high weight compared to its performance. Potential biomedical applications may help in the rehabilitation of patients who have suffered a stroke or spinal cord injury. Current researchers of this technology include Sarcos/Ratheon, Berkeley Bionics/Lockheed Martin, Cyberdyne, Honda and the Massachusetts Institute of Technology.

Variable stiffness materials and variable textured surfaces offer exciting opportunities in tuning a material to a specific condition that it might

encounter. Variable stiffness materials may be used to limit or increase deflections under varying loading conditions. For example, variable stiffness armor could be created to allow for high mobility of a soldier during combat conditions. When a projectile encounters the surface of the armor, the armor may increase its stiffness to combat and disperse the energy from the projectile. Variable textured surfaces may offer improvements in the fields of aerodynamics. For instance, the dimples on a golf ball allow for reduced drag by means of allowing the boundary layer on the forward surface of the ball to transition to turbulent flow characteristics. This allows for a narrower field of low pressure on the backside surface of the ball and thus creates less pressure drag. On an aerodynamic surface of an airplane, being able to control the characteristics of a boundary layer can vastly reduce drag thus decreasing fuel consumption.

1.3 Scope

The scope of this thesis is to provide prototypes to demonstrate static balancing of compliant unit cells for use in a Shape-Shifting Surfaces. Static balancing can reduce or minimize the amount of power required to actuate each cell, therefore reducing or minimizing the total power consumption of the surface. Each unit cell was be constructed from polypropylene on a scale suitable for tangible investigation. The thesis will also discuss applications and future work.

1.4 Background Primer

In the following sections, general background information will be presented for each of the main topic areas within this research. These will include relevant informative and historical information about Shape-Shifting-Surfaces, Compliant Mechanisms and Static Balancing. More sufficient detailed information will be presented in the following chapter.

1.4.1 Shape-Shifting-Surfaces

A Shape-Shifting-Surface (SSS) is defined as a surface whose shape may change while retaining its effectiveness as a physical barrier (2). The purpose of such a surface is to be able to manipulate the surface of a material to a desired shape for a variety of applications as discussed in section 1.2.

Shape-Shifting has been presented mostly in the realm of the supernatural before the 21st century, having to do with werewolves and other mythical creatures. In 2006, Zhongqiang Yang et al. (6) demonstrated that surface topology can be shifted using thermal and UV energy to switch isotropic liquid crystalline mono-domains to an anisotropic state. In 2002, Othon K. Rediniotis et al. (7) published a paper titled "Active Skin for Turbulent Drag Reduction" by using smart materials. In 2010, Microsoft and Apple announced independent development of touchscreens that will produce a real texture for dexterity, a response to consumer complaints about

difficulty in using touchscreens. Most recently, Lusk and Montalbano (2) presented a paper describing concepts for Shape-Shifting Surfaces, i.e. surfaces that retain their effectiveness as physical barriers while undergoing changes in shape.

1.4.2 Compliant Mechanisms

Mechanisms are widely used in applications where precise relative movement and transmission of force are required (8). Mechanisms are commonly thought of as equipment using rigid links and joints to perform a specific task. Unlike rigid-link mechanisms, however, compliant mechanisms gain at least some of their mobility from the deflection of flexible members rather than from moveable joints only (9). Two examples of compliant mechanisms are shown in Figure 1.

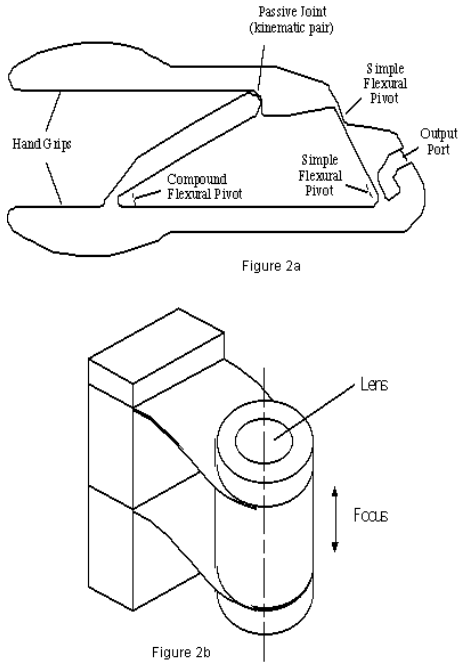

Figure 1- Examples of Compliant Mechanisms (9), (Reproduced with Permission)

The first mechanism replicates a crimping mechanism similar to a set of pliers while the second mechanism has the purpose of focusing a lens used in image processing devices. In each of these designs, flexible members are used instead of joints to achieve the desired motion, force or energy. Typically, compliant mechanisms are monolithic structures but they may be layered to replicate complex behavior.

Historically, compliant mechanisms have been used for thousands of years. Archaeological evidence suggests that bows have been in use since before 8000 B.C. and were the primary weapon and hunting tool in most cultures (10). The bows were made by deforming a piece of wood into a

crescent shape using animal sinew. As the archer held the wood piece, the arrow would be drawn so as to pull the sinew. This would deform the wood piece storing potential energy that would be converted to kinetic energy when the arrow is released. Items as mundane as book covers and plastic lid snaps use compliance in their joints to replicate pin behavior.

Advantages and benefits of compliant mechanisms are summarized from Howell (9) in Table 1.

Table 1 - Advantages and Benefits of Compliant Mechanisms [9]

Performance	Cost
Elimination of backlash for increased precision	Lower total number of parts
Reduced wear, weight and maintenance	Reduced assembly time
Increased reliability	Simplified manufacturing processes

However, there are also a number of characteristics that may be disadvantageous to a mechanism depending on its intended purpose. A drawback of compliant mechanisms is the storage of energy in the flexible segments (3). In order for a compliant mechanism to be maintained in a position other than its preferred position, a force input is required. This means that there is an unnecessary power requirement to maintain this

position. Potential energy storage in the compliant segments as strain energy, affects the input-output relationship (11). Compliant mechanisms will be discussed in greater detail in Chapter 2.

1.4.3 Static Balancing

Statically balanced mechanisms are mechanisms on which the forces of one or more potential energy storage elements are acting, such that the mechanism is in static equilibrium throughout its range of motion, even without friction (12). When a beam is deformed elastically, it stores potential energy in the material which causes the material to revert to its original position once the force causing the deformation is removed. For the purpose of this thesis, this is an undesirable effect.

In a compliant mechanism, a simple way to produce a statically balanced condition is to introduce a member with enough potential energy to counteract the potential energy caused by the deformation. The opposing forces will then cancel out resulting in a zero net force. Under this condition, the statically balanced mechanism will allow for movement without a restoring force.

Static balancing will allow for very small input forces to cause deflection. As noted before, the system will have a zero net force. The only forces that need to be overcome then are the forces due to friction and body forces such as gravity.

CHAPTER 2: KEY CONCEPTS AND RELATED WORK

This chapter is intended to clearly and precisely define all of the key concepts dealt within the rest of this thesis and give background helpful in understanding the forthcoming chapters. This information is a combination of engineering principles as well as some of the particular instruments for the final design. Other information regarding less effective designs is discussed chronologically in the order they were conceived. The intended audience is for people with limited to moderate knowledge of engineering principles and their applications.

2.1 Compliant Mechanisms

Compliant mechanisms have been used for centuries to store energy to be released at a moment specified by the user. Since at least 8000 B.C., bows used in archery have been used for hunting and warfare by many civilizations. The categorization of a bow as a compliant mechanism is obvious because a compliant mechanism uses flexible members to store energy for use to create motion. Taking a look at a simple wooden bow, as the archer draws the arrow, the wood flexes and potential energy is stored.

When the arrow is released, potential energy is converted to kinetic energy (motion) in accordance with the law of conservation of energy.

In this section, Rigid-Body Mechanism theory is discussed as a precursor to design methodologies. Then, details in the theory of elasticity are examined as they relate to compliant mechanisms. Finally, small-length flexural pivots will be discussed to explain how the compliance was integrated into a specific mechanism.

2.1.1 Rigid-Body Linkage

A rigid-body linkage is a device that uses rigid members that can be attached with pin joints (other joints are possible). Commonly referred to as mechanisms, the pin joints allow movement of the rigid links relative to each other. These mechanisms are used to transform or transfer motion, force and/or energy. When these mechanisms are modeled, it is traditionally assumed that the deflections of all the rigid links of the mechanism are negligible as compared with the overall motion of the mechanism.

Rigid-body mechanisms can be arranged in certain ways to create desired motion. Circular motion can be created by rotating a link around a pin joint, commonly referred to as a pivot. The path it takes is dependent on the length of the link and the amount of rotation. As the number of links grows, the lengths of the links and the rotations around the joints dictate the

motion to be created. Parallel, straight and walking motions can be easily produced with skilled design.

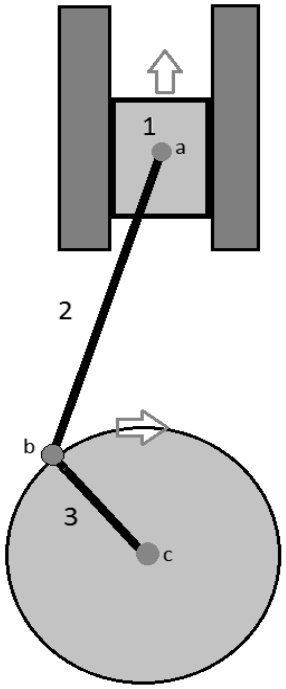

Figure 2- Rigid Body Model - Reciprocating Internal Combustion Engine

Mechanisms may be organized into an apparatus called a machine. Some machines use multiple mechanisms to operate. For instance, the principal rigid-body mechanism that is used in the reciprocating piston internal combustion engine is a crank slider mechanism. Looking at Figure 2 to the right, the linear motion of the piston [1] is converted to rotational motion about point [c] at the crank [3] when a connecting rod [2] is attached between them at points [a] and [b]. The piston is a guided element and can be modeled as a slider while the rotational element is modeled as the crank. Pin joints are located where the connecting rod attaches to the piston [a] and the crank [b].

These mechanisms can be converted to a compliant mechanism through specific design methodologies. The methodologies are discussed in the forthcoming section.

2.1.2 Design Methodologies

Three principal methods are available for analysis of compliant mechanisms: Pseudo-Rigid-Body, Numerical Methods, and Optimal Synthesis with Continuum Models.

The Pseudo-Rigid-Body Model (PRBM), also referred to as the kinematic approximation (9,13-20,31,33), models a compliant mechanism as a rigid-body mechanism. This is done by converting the flexible segments of compliant mechanism into a mechanism with rigid links and pin joints. The pin joints are called characteristic pivots. Torsional springs (32) are then affixed to these characteristic pivots to mimic the force-deflection relationship. Figure 3 illustrates a compliant cantilevered beam and its PRBM. Force analyses in this method are conducted using the Free-Body diagram approach and the Virtual Work and Virtual Displacements Method.

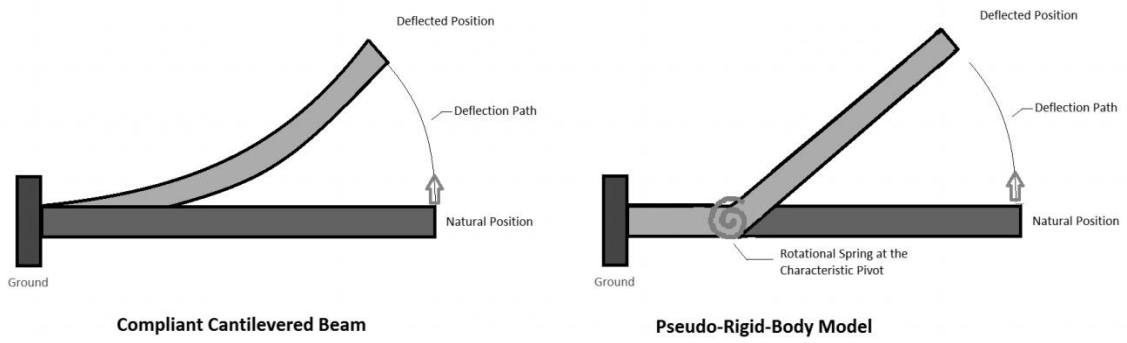

Figure 3 - Comparison of Compliant Mechanism and Pseudo-Rigid-Body Model

The free-body diagram approach uses the premise that the sum of all forces and moments acting on each link are zero. By knowing the external

forces, dimensions and orientations of the links, all of the other forces acting on the links may be found. This is similar in method to any static equilibrium problem. Because this approach solves for the forces at each of the characteristic pivots, it will not be used because only the output displacements and forces need to be found.

The Force-Deflection relationships are primarily found using Virtual Work and Virtual Displacements Method (VWVDM). Knowing that work done on an object is the dot product of the force vector (if it is constant with respect to time) and displacement vectors, the virtual work done on an object is the dot product of the force and a virtual displacement. The total virtual work is done by the algebraic sum of the: 1) work due to the force on the virtual displacement, 2) work due to the moment on a virtual angular displacement, and 3) the negative of the work due to any potential energy sources with respect to the generalized coordinate. The total virtual work is given by:

$$\delta W = \sum_i \vec{F}_i \cdot \delta \vec{z}_i + \sum_j \vec{M}_j \cdot \delta \vec{\theta}_j - \sum_k \frac{dV_k}{dq_k} \delta q_k$$

where: $\vec{F}_i$ - Force vector

$\delta \vec{z}_i$ - Virtual displacement

$\vec{M}_j$ - Moment

$\delta \vec{\theta}_j$ – Virtual angular displacement

V_k – Potential energy sources

q_k – Generalized coordinate

The PRBM and VWVDM are the primary methods used in this paper because of a good accuracy to complication factor. Other methods such as numerical methods and topology optimization are valuable but can be considered too extensive.

"Numerical Methods such as finite element analysis and the chain algorithm are useful in determining the deflections and stresses in compliant mechanisms" (9). These are valuable methods for critical applications and where cost prohibits prototyping. This method is also generally reserved for more complex compliant mechanisms that cannot be easily solved using the PRBM. This numerical method is not used in this work because the PRBM is sufficient for the initial design and for the understanding of the mechanism characteristics.

Topology Optimization is the most general optimization principle. This method uses various possible topologies that describe the design variables. Topology Optimization has the most promise for accuracy but is also very time consuming and is not used in this work for this reason.

2.1.3 Elasticity

The physical property that is most important in compliant mechanisms is elasticity. Elasticity is the material property where the material deforms temporarily under an external force that acts upon the material. When the force is removed after elastic deformation, the material returns to its original

shape. The material is assumed to be homogeneous (uniform structure and composition) and isotropic (similar properties in all directions). Therefore, the material is continuously distributed over its volume. Inconsistencies in the material such as inclusions (impurities) or voids (empty pockets) are neglected. These are typically not entirely accurate but serve as reasonable approximations because the material manufacturer can closely control and minimize these defects.

The study of the behavior of elasticity began with Galileo Galilei in the late 16th century and early to mid-17th century. The concept of elasticity was first published as *"Ut tension, sic vis"* by Robert Hooke in 1678. Elasticity is categorized under the study of solid mechanics, the study of the physics of a continuous material with a defined resting state. "Of the states of matter, we are here concerned only with the solid, with its ability to maintain its shape without the need for a container and to resist continuous shear, tension, and compression" (13). Mechanics of materials is an approach used in solid mechanics and is generally regarded to be more or less an approximate solution. The theory of elasticity is an "exact" mathematical method of analyzing the stress and strain distributions in a material but is much more analytically demanding. Both methods should be deemed as approximations of nature, one just more accurate than the other. The majority of this thesis uses principles of the mechanics of materials because of their ease of application.

Two types of forces may act on a body: External and Internal. External forces can be further categorized into surface or body forces. Surface forces can act at a point (concentrated) or along an area (uniform or non-uniform). Body forces such as gravity, electromagnetic and inertia are neglected in the final prototype. The forces that hold the particles of a material together are internal forces.

Important concepts for a material undergoing an elastic process are stress and strain. Stress is the average force per unit area of a sectioned surface within a body that internal forces are acting upon. Two definitions of stress are in use: Engineering stress (where the cross sectional area is assumed to be constant) and True stress (where the cross sectional area change under deformation is taken into account). Engineering stress is more conservative and because we assume the cross sectional area does not change, engineering stress is used exclusively. The internal forces can be created by an external force, temperature changes within the material or by body forces.

Strain is the amount a body deforms with respect to its original configuration, where configuration refers to the set of all of the positions of the particles within the body. Like stress, there is an engineering strain and true strain, the difference is similar so engineering strain will be considered. Many materials exhibit approximately linear elasticity over a certain amount of strain. This means that the stress is proportional to the strain, which is commonly known as Hooke's Law. Consideration should be made if the strain

in a material is large enough to cause significant changes in the cross sectional area or its dimensions. If this occurs, the analysis should take into account nonlinearities.

The elastic modulus is the mathematical description of a material's tendency to be deformed elastically (14) and is defined as the slope of the stress-strain curve in the elastic deformation region (15). Young's Modulus is the measure of the modulus of elasticity in tensile loading. When opposing forces are applied along an axis (tension), the Young's Modulus describes a material's tendency to be deformed elastically. This is opposed to the other measurements the shear modulus (shearing deformation) and bulk modulus (volumetric deformation).

The upper limit of the linearly elastic region for a material is a stress called the proportional limit. This is the first point where the material may not respond elastically and can permanently deform. Once a stress called the elastic limit is surpassed, the material will begin to plastically deform. This is the point where some of the deformation performed will not be reversible. The plastic deformation is caused by permanent displacements and rearrangements of the atomic structure. Plastic deformation is an undesirable result in compliant mechanisms and is a product of excess forces acting upon the flexible members. The flexible members in the prototypes have been designed such that plasticity did not come into effect.

2.1.4 Small-Length Flexural Pivots

A small length flexural pivot is a special Pseudo-Rigid-Body Model used to design some compliant mechanisms (34). This type of pivot is apt for approximating a linkage because the small length flexural pivot is easily incorporated into the area where a rigid-body model pin would be.

The equivalence between small-length flexural pivots and pin joints is relatively straight forward. Let a beam have two segments, a rigid segment and a flexible segment. If the flexible segment is on the order of a tenth or smaller of the size of the rigid segment, it is referred to as a small-length flexural pivot. In general, the motion of the link can be modeled as a rigid link attached to a pin joint. The pin joint in the approximation is called the characteristic pivot and is modeled as two smaller rigid links connected at a pin joint. For a horizontal beam, this yields accurate vertical deflections and beam tip angles for small deflections (below 80% of the beams length) but slightly overestimates the horizontal deflections.

The characteristic pivot is also typically located at the midpoint of the flexible segment. However, the characteristic pivot may be acceptably placed at any location on the flexible segment. Because the deflection occurs at the flexible segment and is small compared to the length of the rigid segment, this is an accurate assumption. For convenience of calculation, the characteristic pivot is placed at the midpoint.

The flexible segment will have a calculable amount of resistance to the deflection. This is due to the elastic deformation discussed in section 2.1.3.

As the deformation occurs, the flexible segment produces a restoring force that would return the link to the original position if the load causing the deformation were removed. This is modeled as a torsional spring located at the characteristic pivot. The torsional spring has a constant value commonly referred to as the spring constant. The torque required to rotate the link around the characteristic pivot is the product of the spring constant and the angle to which the link rotates. The torque is applied at the midpoint of the flexible segment.

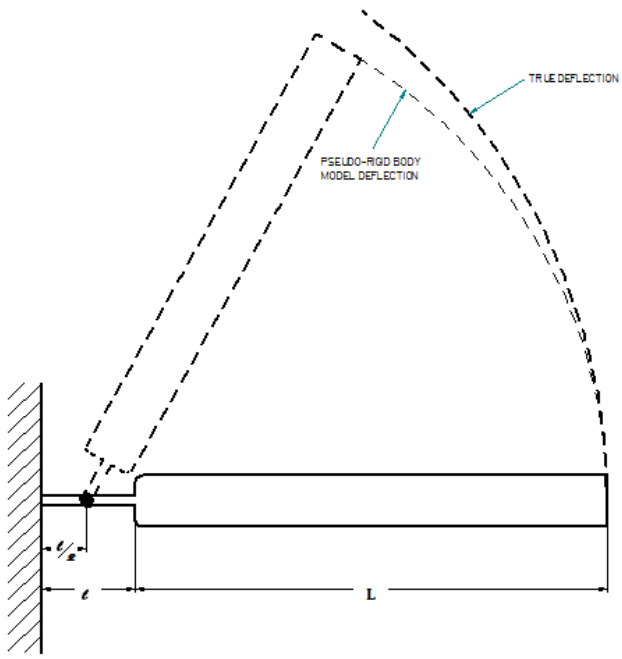

Figure 4 - Small Length Flexural Pivot

Note the position of the characteristic pivot at $\frac{l}{2}$. The position of the characteristic pivot does move but is approximated to remain stationary. This approximation adds minimal error.

It should be known however that the actual deflection experienced and the calculated deflection will have some error in this model. Shown in figure 4 is the approximated path versus the calculated deflection. Note how the amount of error between the two paths grow as the rigid link's deflection is increased. This is because the approximate location of the pivot changes throughout the motion. "This model is most accurate if bending is the dominant loading in the flexural pivot. If transverse and axial loads are larger than the bending moment, greater error will be introduced into the model" (9). This model is still accurate enough for the proof of concept.

2.2 Shape-Shifting-Surfaces

Shape-Shifting-Surfaces (SSS) are surfaces that undergo changes in shape while maintaining the effectiveness of acting as a physical barrier as shape changes are performed. Potential shape changes could be motions such as expanding, shrinking, swallowing or twisting.

The Shape-Shifting-Surface is intended to be a low-cost modular building system with customizable degrees-of-freedom (DOF) and stiffness (2). DOF can be defined as a set of independent rotations or displacements. These DOF are meant to specify the orientation of an object or system of objects as well as a displaced or deformed condition. For instance, a rigid solid object (i.e. one that cannot deform), may have up to six degrees of freedom: three rotations about a reference x,y and z axis and three translations in the directions of these axes. For clarification, a translation is a

motion where an object moves without rotating about any axis while rotation is a motion where an object revolves about some axis. Stiffness is observed along any DOF and is the resistance to deformation of an elastic body. For example, if one bends a ruler, the restoring force pushing the ruler back is the mathematical product of the stiffness and the displacement. If there is zero stiffness, then there is no restoring force. Likewise, there is no restoring force if there is no displacement. The ability to customize the DOF allows for customizable motions. Stiffness customization allows the amount of restoring force to be optimized for the particular application.

2.2.1 Finite Element Analogy

Lusk and Montalbano (2) describe three design concepts for the application of the SSS. The first involves modeling a unit cell of an SSS as a finite element. Systems for subdividing surfaces (16) have received attention in the development of Finite Element algorithms (17). Finite elements are used as an analysis tool to sub-divide a surface or object into smaller elements. Each of the elements are connected to each other at positions called nodes. Each element is then treated as a finite elastically deformable object. When boundary conditions and loads are applied at these nodes, an approximation of the stress and strain in a part can be obtained at any point. "The approximation can be improved by using more elements of smaller size at the expense of increased computation time" (18). If an SSS is comprised of multiple cells, each cell can be modeled as a finite element.

Customizing the DOF and stiffness for each cell can modify the properties of a bulk material that the unit cell is constructed from and allow total customization of the deformations and their associated forces. "In an SSS, a kinematic scheme is required to fill the gaps between nodes" (2). This is to facilitate the design of the pieces that constitute the SSS.

2.2.2 Planar SSS

The second concept presented by Lusk and Montalbano (2) involves the design for a planar SSS. This involves several design steps for developing a SSS oriented in a planar arrangement.

The first step is to define an initial shape before the shape is shifted. Careful considerations should be made however to accommodate for changes in shape. As the surface changes its shape, the number of unit cells cannot change but the overall area and perimeter can. If a required shape generation is performed, the unit cells must have the capability to change their area and perimeter.

The second step is to define a scheme for the assembly of the unit cells and an overall definition of the geometry of the surface. Based on the properties of small triangular areas, mathematicians have recognized three basic categories of surfaces: hyperbolic, spherical and planar surfaces (19). As in the Finite Element Analogy, any surface can be subdivided into smaller elements. The vertices of the sides of the unit cells can be modeled as the

finite element nodes. Tiling systems can be accomplished in three general arrangements: Regular, Archimedean and Penrose.

The third step involves the assignment of a kinematic scheme to each unit cell. The purpose of a kinematic scheme is to allow the unit cell to perform the required deformations. Careful considerations of the DOF are required for each unit cell to be able to compound that effect to the overall surface.

The fourth step is to design the portions of the SSS that are inflexible to be able to preserve the integrity of the surface. These shapes should be made in such a way as to perform motions like sliding, rotating and overlapping other areas that are not occupied by rigid segments. All moving portions of the unit cell must also remain contained within the nodes so as not to intrude on the surrounding unit cells.

The fifth step involves the design of compliant portions of the cell to perform the kinematic motions required by the SSS. Starting with a rigid body model, compliant mechanisms can be modeled to perform the same motions as the rigid-body model.

The final step is a consideration of the interface between cells. This includes limiting or increasing mobility of adjacent unit cells. Three dimensional shapes can be generated by attaching various sizes of unit cells or by simply arranging the cells at some angle with respect to each other.

2.2.3 Shapes and Polygonal Surfaces

The final concept is of developable surfaces. A developable surface can be formed by bending while not compressing or stretching the surface. Polyhedral surfaces (geometrically solid surfaces with flat faces and straight edges) can be created by inducing curvature and connecting planar faces. In this thesis, only a single unit cell is considered. Tiling multiple unit cells is an area for future research.

2.3 Static Balancing

To achieve static balancing, five criteria are proposed by Gallego et al. (11) and are listed below. The five criteria presented are not independent of one another but may be more useful depending on the design approach. Detailed explanations are presented for the remainder of this section.

1. Constant Potential Energy
2. Continuous Equilibrium
3. Zero Stiffness/Neutral Stability
4. Zero Virtual Work
5. Zero Natural Frequency and Constant Speed

The <u>Constant Potential Energy criterion</u> expands off of the law of conservation of energy which states that the total amount of energy in a system is conserved over time and cannot be created nor destroyed. Energy in this case is divided into two types, kinetic and potential. Kinetic energy is

associated with the motion of an object, specifically the energy it possesses due to the motion. Potential energy is associated with the energy stored in an object due to its position relative to its lower energy configuration. There must be a restoring force on the object for potential energy to exist. Kinetic and potential energy in a closed system are such that if the kinetic energy in the system increases by some amount, then the potential energy decreases by the same amount, vice versa.

To meet the Constant Potential Energy criterion, the kinetic energy of the system must also be constant due to the law of conservation of energy. Since the kinetic energy is constant, then there must be zero net acceleration on the object and therefore must move at a constant velocity.

The derivative of potential energy with respect to displacement is force. Therefore, if the potential energy is constant, the net force acting on the system must be zero throughout its range of position. This satisfies the condition of static balancing. The drawback to meeting this criterion is the condition can only be met if the force is conservative. A conservative force is one where the work done in motion is independent of the path of the object. This condition can however be met when friction is absent in a compliant mechanism. Friction is a non-conservative force. This will be the main criterion that will be used in statically balancing the unit cell. The other methods will therefore be discussed in much less detail.

Continuous Equilibrium is a criterion where there must be multiple continuous points at equilibrium for static balancing to occur. "If the potential

energy is constant for certain range of motion, then, it must be true that the derivative of the potential energy with respect to the DOF's that define the range of motion are equal to zero" (11). This is similar and complimenting to the Constant Potential Energy criterion, but demonstrates that the systems energy is a function of the Degrees of Freedom (DOF), geometric variables and mechanical variables. Static balancing is a result of the roots of equating the energy derivative to zero.

The Zero Stiffness criterion deals with the stiffness of the system. The second derivative of potential energy with respect to displacement is stiffness. A stiffness function may be found by investigating the behavior of the stability of the system. When the second and higher derivatives of potential energy are set to zero, a zero stiffness condition may be found. This criterion is insufficient alone because it may also represent a system with a constant force. Constant force only implies a linear potential energy. Creation of a negative stiffness mechanism will be investigated to oppose and balance the positive stiffness of a compliant mechanism.

The criterion of Zero Virtual Work states that if the potential energy of a system is constant, then the net virtual work is zero across any point in the motion of the system. This method is similar to the Continuous Equilibrium and Zero Stiffness criterion.

The last criterion presented is Zero Natural Frequency and Constant Speed. It states that a system will have zero natural frequency when a system is statically balanced. Also, where damping is not considered and

external forces do not exist, the system will move at a constant speed. This criterion is useful for systems with one DOF but becomes complex as the number of DOF is increased.

2.4 Peaucellier-Lipkin Linkage

The Peaucellier-Lipkin Linkage (PLL) was independently invented by Charles-Nicolas Peaucellier and Lippman Lipkin in 1864 (20). "This was the first linkage capable of transforming rotary motion into perfect straight-line motion, and vice versa" (21). This is done without the need for guide-ways.

The linkage has several key geometric principles. The mechanism has six bars of fixed length. In figure 5, two fixed pivot points are required A and B. If a circle is drawn, which is centered at B passing through point A, another point C can be created so the distance between A and C is the diameter of the circle and C is constrained to move along that circle.

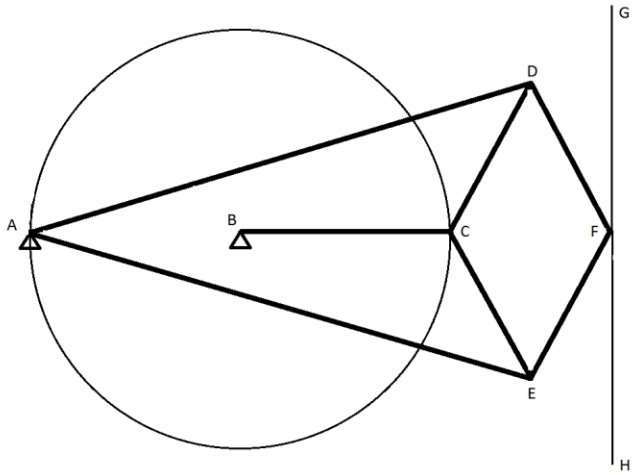

Figure 5 - Peaucellier-Lipkin Linkage

Now construct a rhombus where one of the vertices is point C. Let the others vertices be labeled D, E and F. Sides CD, DE, EF and CE are equal. Each of those sides are links that pivot at the vertices. Another link is drawn from B to C. Two additional links are drawn from A to D and from A to E. The following properties result from the construction of a PLL:

- Point F moves in a straight line from G to H and vice versa as C is rotated about point B
- Points A, C and F are collinear
- Point C follows the circle centered at B
- Points D and E follow a circle centered at A
- Points C and F are inverse points
- The angle between links CE and CD is equal to the angle between links DF and EF
- The angle between links CD and DF is equal to the angle between links CE and EF
- Triangles CDF and CEF are congruent
- Triangles ACD and ACE are congruent

The forthcoming chapter takes the information presented in this chapter and presents how static balancing is achieved. The design approach is also examined with the less effective prototypes.

CHAPTER 3: DESIGN APPROACH AND METHODS

This chapter presents different theories of how to accomplish the design of a Statically Balanced Shape-Shifting Surface (SB-SSS). Here the focus will be primarily on the moving segments within the unit cell and not the overall unit cell. This means that this chapter only examines 1D motion (i.e. motion along a straight line). Examination of the chronological process will be demonstrated and why two methods were researched and eliminated. The working model will be presented in the following chapter as the final implementation of the statically balanced condition.

3.1 General Design Approach

The approach to determining the best method to statically balancing a one dimensional mechanism is presented chronologically in the forthcoming sections. All of the methods presented follow the attempt to offset the force-deflection relationship of one mechanism with another. The first two methods focus primarily on similar mechanisms that are combined in such a way as to provide static balancing. The final method uses a dissimilar set of mechanisms and will prove to be the most applicable. Each section will detail the theory, application, and the pros and cons of each method.

The material used for the prototyping process is a Polypropylene sheet of ¼ inch thickness. The processing will be completed on a CNC (Computer Numerical Controlled) 85 Watt CO_2 Laser operating on a gantry suspended over the sheet.

3.2 Constant Force Model

The Constant Force Statically Balanced Mechanism is based on combining two constant force mechanisms. Constant force mechanisms are intended to produce a constant force throughout their range of motion. Their combination would be such that one constant force mechanism would have a force acting in one direction and another constant force mechanism acting in the opposite direction. By simple summation of forces acting in the system, the forces produced by each mechanism are the same but act in opposite directions, then the net force should be zero throughout the range of motion. This method does not produce negative stiffness nor is it intended to.

3.2.1 Compliant Constant-Force Mechanism

The purpose behind a Constant-Force mechanism (26) is to produce a nearly constant force throughout their range of motion. Various papers have been published detailing rigid-body mechanisms that produce a constant force throughout their range of motion. Nathan (22) proposed a system that uses a hinged lever to produce a constant unidirectional force for any

position. Jenuwine (23) and Midha (24) proposed a system that uses rigid links in combination with linear springs to create constant force. This system is now successfully implemented in concrete testing equipment.

Compliant Constant-Force mechanisms have also been proposed (25) (26) and have resulted in the identification of 28 possible configurations (27) (28). The Constant-Force Compliant mechanisms consist of Compliant Slider Mechanisms. The system is analyzed using the Pseudo-Rigid-Body Model and equations for rigid-link slider mechanisms.

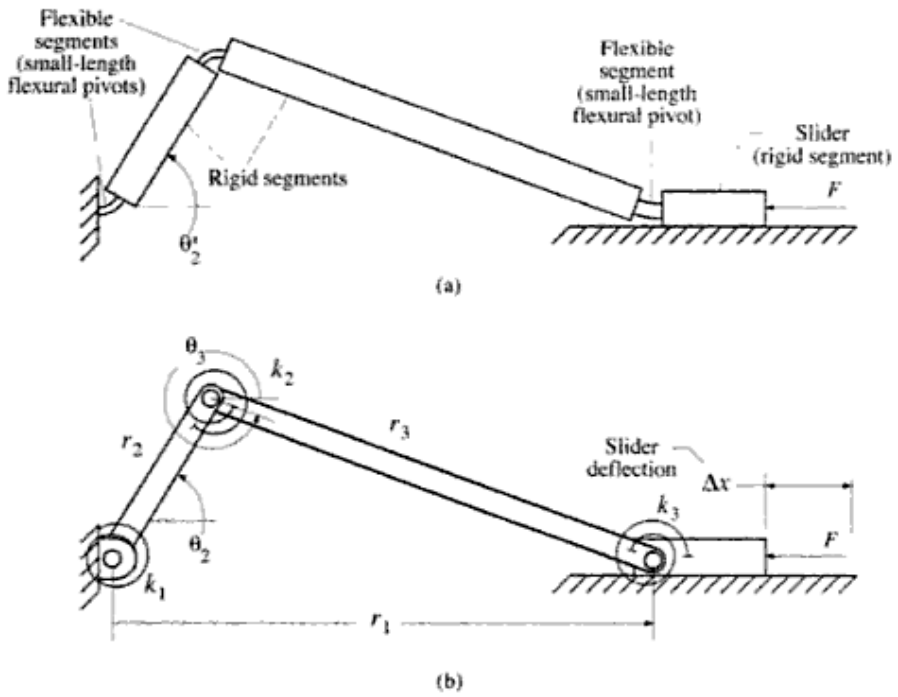

Figure 6 - Slider Mechanism (Reproduced with Permission)

The analysis of the constant force model is provided by Howell (9). The following equations describing various elements have been determined based on the link lengths. Let Δx be the deflection of the slider.

$$r_1 = r_2 + r_3 - \Delta x$$

$$\theta_2 = \cos^{-1}\left[\frac{r_1^2 + r_2^2 - r_3^2}{2r_1r_2}\right]$$

$$\theta_3 = \sin^{-1}\left[\frac{-r_2 \sin\theta_2}{r_3}\right]$$

Using the principle of virtual work discussed in chapter 2, the force at the slider can be found:

$$F = \frac{r_3 \cos\theta_3\,[k_1\theta_2 + k_2(2\pi + \theta_2 - \theta_3)]}{r_2 r_3 \sin(\theta_2 - \theta_3)} + \frac{r_2 \cos\theta_2\,[k_2(2\pi + \theta_2 - \theta_3) + k_3(2\pi - \theta_3)]}{r_2 r_3 \sin(\theta_2 - \theta_3)}$$

Constant force compliant mechanisms are defined by Howell (9) to properly categorize the mechanisms. Figure 2 shows the values to be used in the aforementioned equations.

Table 2 - Non-Dimensionalized Values for Constant Force Mechanisms (Reproduced with Permission)

Class	$\Delta x/(r_2+r_3)$	R	K_1	K_2	Ξ	Φ
1A	0.16	0.8274	—	—	1.0030	0.4537
	0.40	0.8853	—	—	1.0241	0.4773
1B	0.16	1.0000	—	—	1.0564	2.0563
	0.40	1.0000	—	—	1.1576	2.1513
2A	0.16	0.3945	0.1906	—	1.0015	0.9575
	0.40	0.4323	0.2237	—	1.0058	1.0466
2B	0.16	0.7591	—	0.1208	1.0721	1.2259
	0.40	0.8441	—	0.1208	1.1914	1.2154
3A	0.16	2.6633	1.0000	12.6704	1.0002	3.4016
	0.40	2.0821	1.0000	9.3816	1.0049	3.6286

Figure 7 shows different configurations of the constant force model. Class 3A was used because it does not have pin joints.

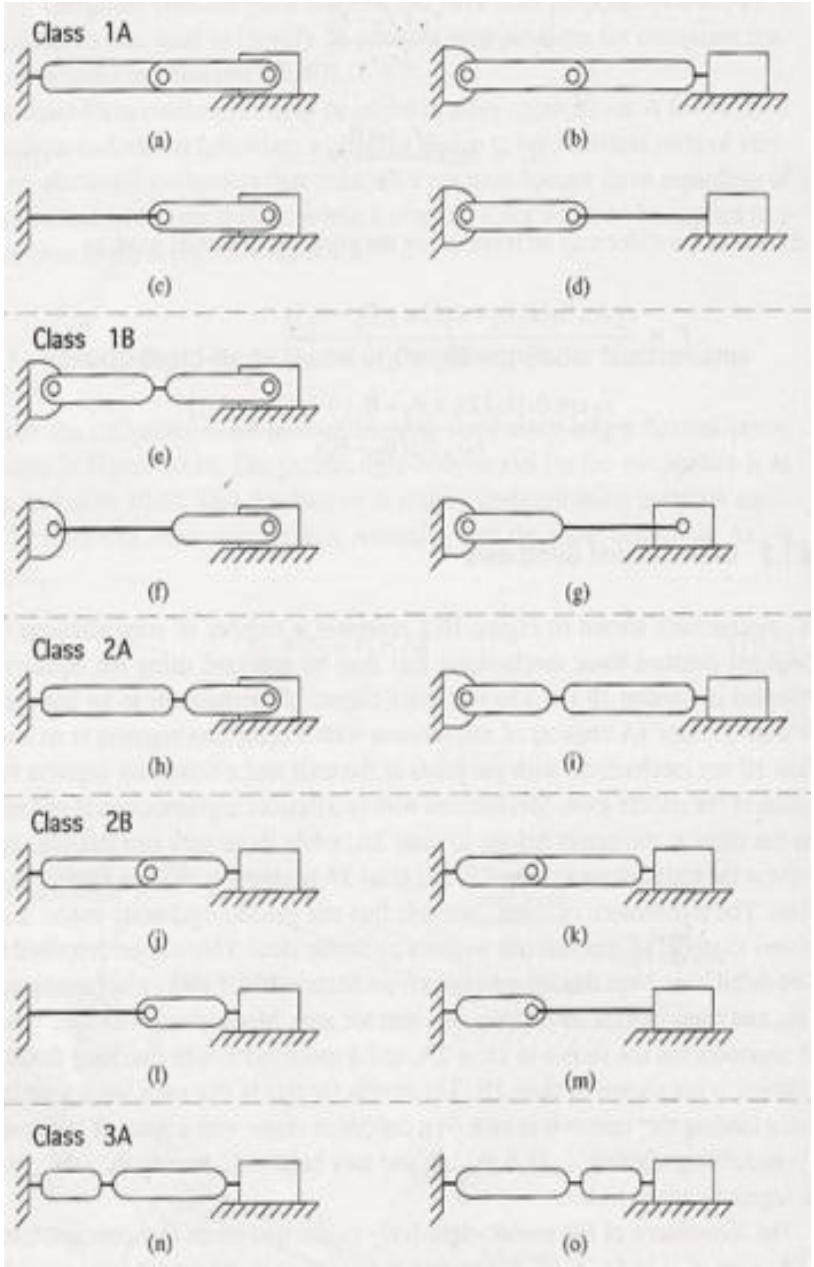

Figure 7 - Schematic of Constant Force Mechanism (Reproduced with Permission)

3.2.2 Theoretical Approach

Class 3A (figure 7) was determined to be the best fit to be able to develop and analyze a Statically Balanced Constant-Force Compliant mechanism. The three flexible segments can be modeled as small length flexural pivots as discussed in section 2.1.4. This will make analyses of stress in these flexible members simple if the mechanism acts as theorized. The Class 3A Compliant Constant-Force mechanism has a ratio of maximum to minimum force (Ξ) of either 1.0002 for a 16% deflection per total length of mechanism or 1.0049 for a 40% deflection per total length of mechanism. Ideally, this value should be as close to 1 as possible because this would imply that there would be minimal deviation in the force over the range of deflection.

The mechanism will consist of two layers: the Structural Layer (figure 8) and the Balancing Layer (figure 9). The Structural Layer will act as a base structure and the Balancing Layer will act as a layer to provide the same magnitude of force but in the opposing direction. If the two mechanisms are combined in a manner such that they produce opposite directions of force of equal magnitude over a certain deflection, then static balancing may be found.

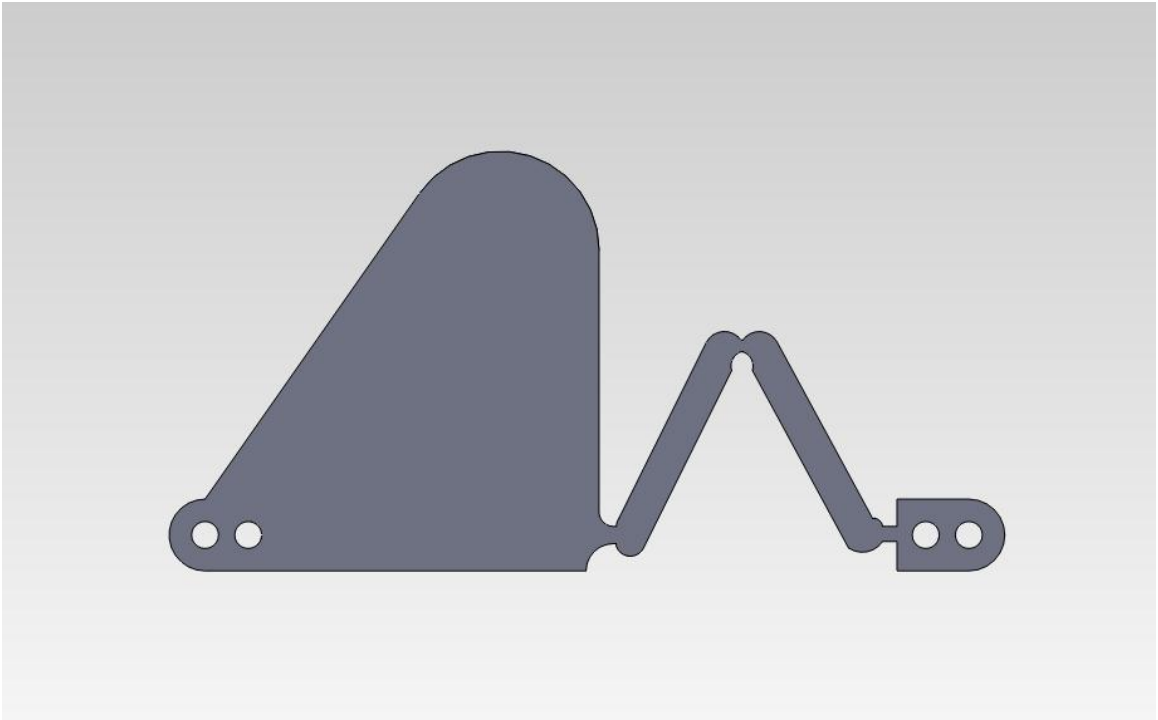

Figure 8 - Structural Layer of Constant Force Mechanism

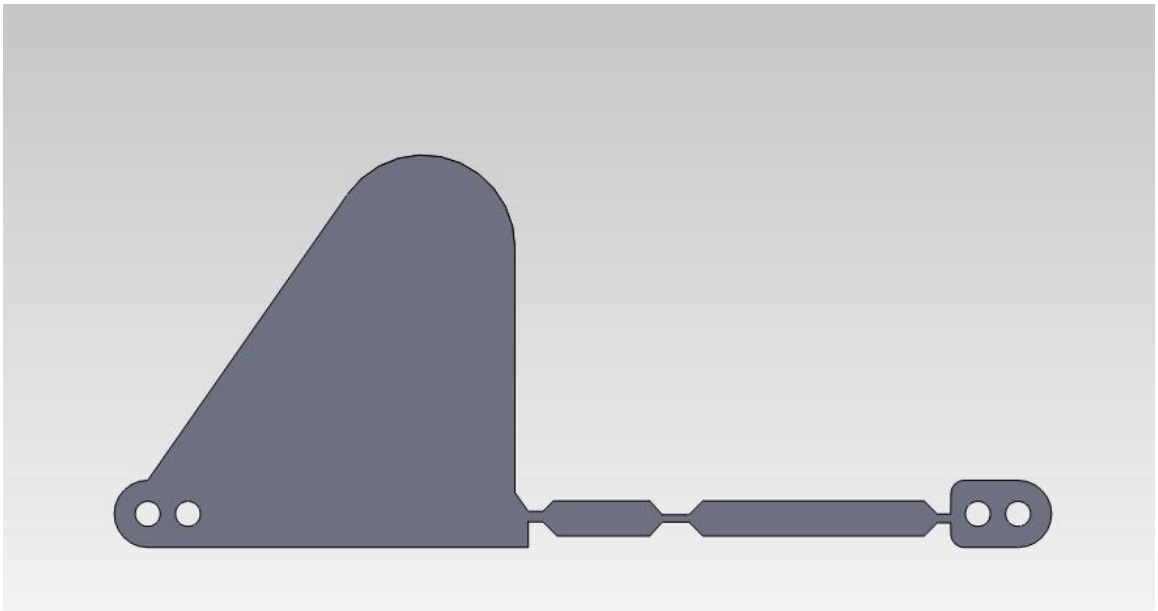

Figure 9 - Balancing Layer of Constant Force Mechanism

3.2.3 Results

The overall result of this prototype is that the prototype failed to operate as intended. The failure may be the result of several factors that must be accounted for in later prototypes but the most significant factor was the lack in creation of negative stiffness.

The first issues with this prototype is that the first prototype cut out on the laser could not replicate the calculated necessary thickness of the short length flexural pivot. The calculated thickness was 0.020 inches. The heat generated by the laser combined with the blowing action in the CNC program blew too much of the material away resulting in a frail flexural pivot. After a certain amount of cycling, the pivot through its motion created an instantaneous pivot in the short length flexural pivot. The issue here is that this action disrupts the compliance of the segment. This was fixed in later iterations by recalculating for a thicker flexural pivot.

Further observation of the cross section showed that the cut produced by the laser is not perfectly straight. The cross section is that of an isosceles trapezoid. The characteristics of this difference between the dimensions drawn in Solidworks and those produced during processing are different but predictable and repeatable. These observations will be accounted for in later prototypes.

Material issues are twofold. The first issue was overstressing the thin segments. This issue was simultaneously fixed when the segments were thickened. The other main issue that would continue to plague the

prototyping process is noticeable creep at room temperature. Creep is a process whereby a material permanently deforms under the influence of stress even when the stress is below the yield strength of the material. The process is a function of the material temperature and the time duration of the applied stress.

This phenomenon is a serious setback for the prototyping process because polypropylene is very susceptible to creep at room temperature. The inability to manufacture prototypes cost effectively in another material prohibits long term storage of elements even when they are not in use. This is because static balancing requires one or more elements to be in a deformed state to achieve negative stiffness and opposing forces. The simple solution is that they will need to be disassembled after demonstration until a suitable material can be used cost effectively.

Another setback in the development of this particular arrangement is that the mechanism does not have enough constraints to maintain one dimensional motion. The primary reason for this is that it involves a mechanism that needs a slider to prevent motion in the second dimension. The slider could be integrated but it was abandoned because of the overall issue of failure to create negative stiffness.

The lessons learned from this mechanism are critical to further development of the desired conditions. The manufacturing issues are either solved or reduced for future prototypes allowing more precise replication of parts that meet the calculated criteria. The material issues cannot be entirely

solved until suitable materials can be introduced economically. Some of these materials may be spring steel or Delrin.

3.3 Statically Balanced Joint Method

The Statically Balanced Joint (SBJ) method is a method that follows a similar mindset as the method discussed in the previous section. The mechanism is intended to statically balance the joints of the mechanism so it provides a circuit of balanced joints that will balance the entire mechanism.

3.3.1 Theoretical Approach

Shown in figure 10, the SBJ is modeled after a single cantilevered beam with a short length flexural pivot at the point of contact with the ground surface (i.e. the portion of the model that is the origin and reference). Two of these mechanisms are then layered, one on top of the other. The orientations of the mechanisms are offset with respect to each other in order to provide a balance of forces. The free end of each of the cantilevered beams would then be fixed together in hopes of offsetting the force produced by the other mechanism.

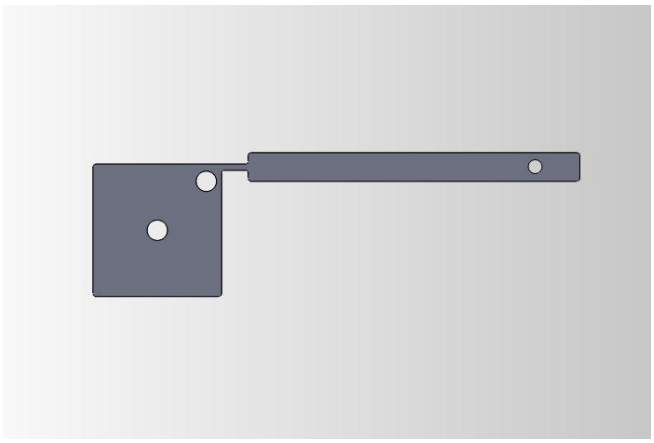

Figure 10 - Statically Balanced Joint Prototype

3.3.2 Results

This method, however simple, did not produce the desired results. A number of issues that were presented in the previous sections may have attributed to this result. The overall conclusion is that the combination of two positive stiffness members in opposing force directions may not be the best method to produce statically balanced mechanisms.

3.4 Negative Stiffness Pinned-Pinned Beam

The Negative Stiffness Pinned-Pinned beam is a method that uses a preloaded Pinned-Pinned beam layered on top of a guiding compliant mechanism to produce negative stiffness. This is done through the application of an Initially Curved Pinned-Pinned beam to produce a component force counteracting the resistive force of the other compliant mechanism.

3.4.1 First Approach

The first approach to this idea was very simple. It involved creating a statically balanced condition for a similar design provided by Dr. Craig Lusk. His mechanism used a double initially curved fixed-guided beam to control the motion of the points in a manner such that nearly straight motion was achieved.

The compliant segment (see figure 11) is modeled as an initially curved fixed-pinned beam using Pseudo-Rigid-Body analyses. The following equations characterize the model and are provided by Howell.

The initial curvature (k_0) is a non-dimensionalized parameter and is defined by:

$$k_0 = \frac{l}{R_i}$$

where R_i is the radius of curvature. The initial pseudo-rigid-body model angle is given by:

$$\Theta_i = \tan^{-1}\frac{b_i}{a_i - l(1-\gamma)}$$

Furthermore, the initial coordinates of the end of the beam are given by a_i and b_i in the x and y directions respectively. l is the length of the member as if it were not initially curved, or rather the arc length of the beam. The variable γ is the characteristic radius factor.

$$\frac{a_i}{l} = \frac{1}{k_0}\sin k_o$$

$$\frac{b_i}{l} = \frac{1}{k_0}(1 - \cos k_0)$$

As the beam is deflected throughout its range of motion, the end coordinates of the beam are a function of the pseudo-rigid-body angle (Θ).

$$\frac{a}{l} = 1 - \gamma + \rho \cos \Theta$$

$$\frac{b}{l} = \rho \sin \Theta$$

Finally, the forces at the tip of the beam can be characterized by the following:

$$F_t = F \sin(\Phi - \Theta)$$

$$\Phi = \tan^{-1} \frac{1}{-n}$$

$$\frac{F_t l^2}{EI} = K_\Theta (\Theta - \Theta_i)$$

Note that n is the ratio of the force in the x-direction and the force in the y-direction. E is the Young's modulus of the material and I is the polar moment of inertia of the cross-section. The following table is adapted from Howell and gives various values for initial curvatures for use in the aforementioned equations.

Table 3 - Values for Initially Curved Compliant Beams (Reproduced with Permission)

κ_o	γ	ρ	K_Θ
0.00	0.85	0.850	2.65
0.10	0.84	0.840	2.64
0.25	0.83	0.829	2.56
0.50	0.81	0.807	2.52
1.00	0.81	0.797	2.60
1.50	0.80	0.775	2.80
2.00	0.79	0.749	2.99

To balance the mechanism, an initially curved pin-pin beam (figure 12) simulating a linear spring was used. The balancing segment rotates through the deflection path of the Initially Curved Fixed-Pinned beam. As this process occurs, the y-direction of motion is constrained by the initially curved fixed-pinned beam. Based on the assumption that the change in y is zero, there will be a component of the force in the x direction. Then as deflection occurs, a restoring force acts in the opposite direction of the force generated by the spring. The force is meant to increase proportionally with the displacement.

Figure 11 - Structural Layer of Fixed-Pinned Beam

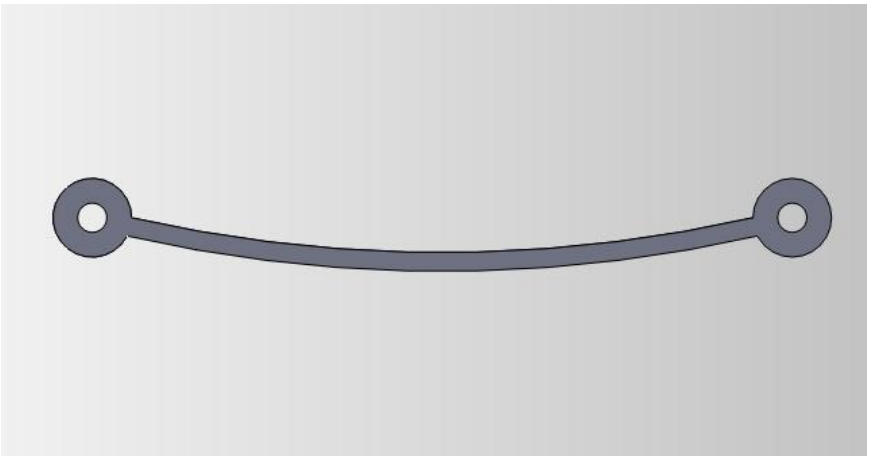

Figure 12 - Balancing Layer of Fixed-Pinned Beam

Upon initial assembly, it was immediately evident that the balancing segment applied a force that moved the structural segment. This proves that the mechanism is not statically balanced. The force generated by the spring has a significant impact on the displacement of the beam in the y-direction and also generated a moment in the mechanism that was not accounted for. This does not allow for a linear force deflection relationship for the spring.

3.4.2 Second Approach

The second method is similar to the first with one critical exception: the structural segment is made to be a fixed-pinned beam without initial curvature. This should help to reduce or eliminate y-direction motion of the structural segment during deflection and the initial state.

The structural segment has the following equations to characterize the motion and forces. The tangential force is given by:

$$F_t = \frac{EIK_\Theta \Theta}{l^2}$$

and,

$$F_t = F \sin(\Phi - \Theta)$$

The pseudo-rigid-body angle is given by:

$$\Theta = \tan^{-1} \frac{b}{a - l(1 - \gamma)}$$

The end coordinates of the beam are given by:

$$\frac{a}{l} = 1 - \gamma(1 - \cos\Theta)$$

$$\frac{b}{l} = \gamma \sin\Theta$$

The characteristic radius factor and stiffness coefficient are shown in the table below with respect to the direction of the force. The table below is provided by Table 5.1, Howell.

Table 4 - Numerical Data for Fixed-Pinned Beam (Reproduced with Permission)

n	ϕ	γ	$\Theta_{max}(\gamma)$	c_Θ	K_Θ	$\Theta_{max}(K_\Theta)$
0.0	90.0	0.8517	64.3	1.2385	2.67617	58.5
0.5	116.6	0.8430	81.8	1.2430	2.63744	64.1
1.0	135.0	0.8360	94.8	1.2467	2.61259	67.5
1.5	146.3	0.8311	103.8	1.2492	2.59289	65.8
2.0	153.4	0.8276	108.9	1.2511	2.59707	69.0
3.0	161.6	0.8232	115.4	1.2534	2.56737	64.6
4.0	166.0	0.8207	119.1	1.2548	2.56506	66.4
5.0	168.7	0.8192	121.4	1.2557	2.56251	67.5
7.5	172.4	0.8168	124.5	1.2570	2.55984	69.0
10.0	174.3	0.8156	126.1	1.2578	2.56597	69.7
-0.5	63.4	0.8612	47.7	1.2348	2.69320	44.4
-1.0	45.0	0.8707	36.3	1.2323	2.72816	31.5
-1.5	33.7	0.8796	28.7	1.2322	2.78081	23.6
-2.0	26.6	0.8813	23.2	1.2293	2.80162	18.6
-3.0	18.4	0.8669	16.0	1.2119	2.68893	12.9
-4.0	14.0	0.8522	11.9	1.1971	2.58991	9.8
-5.0	11.3	0.8391	9.7	1.1788	2.49874	7.9

In this analysis, both x and y-direction forces are taken into account to balance the mechanism. This should allow for a more accurate derivation of

the results. Similar to the First Approach, the mechanism uses the initially curved pin-pin beam to provide the force resisting the restoring force of the structural segment.

Upon assembly, it is clearly evident that the curved path generated by the fixed-pinned beam has much greater influence than was previously thought. This issue was first noticed during calculation, but it was assumed that the error in the mathematical model may be large enough for the assembly to potentially work correctly. To solve this issue, a perfectly linear path must be generated by the structural segment in order for the pin-pin beam to act as a linear resistive force to the restoring force. During further research, the Peaucellier-Lipkin linkage was shown to offer perfect straight line motion without the need for guide ways that could induce unwanted additional friction.

3.4.3 Third Approach

The third approach seeks to remedy the issues found in the previous two approaches. The first issue to be addressed is to eliminate the semi-circular path of the structural segment. To do this, a mechanism to produce straight line motion was researched and the Peaucellier-Lipkin linkage was selected to perform this task.

The Peaucellier-Lipkin linkage was discussed in the previous chapter, so its basic operating parameters will not be discussed. The manner in which

the linkage was "converted" to a compliant mechanism is discussed in the forthcoming chapter. The balancer remains the pin-pin initially curved beam as it is thought to be the best method of producing negative stiffness.

The third approach is the most successful method of producing a one dimensional statically balanced compliant mechanism for use in the unit cell. The next chapter details the methods and physics of the mechanism.

CHAPTER 4: ONE DIMENSIONAL STATICALLY BALANCED COMPLIANT MECHANSIM

This chapter details the physics and mathematical models used to produce the one dimensional statically balanced compliant mechanism. The mechanism employs a Peaucellier-Lipkin linkage that has been modified to be a compliant mechanism. The mechanism was further modified to reduce the thickness of the mechanism and to simplify its assembly. The next section will detail the use of the pin-pin initially curved beam and its effects on the mechanisms behavior. The last section is a stress analysis of the Peaucellier-Lipkin linkage and the pin-pin initially curved beam.

4.1 Conversion of the Peaucellier-Lipkin linkage

The conversion of the Peaucellier-Lipkin linkage is achieved primarily through the use of the principle of virtual work. To achieve this, displacement vectors, forces, moments and a kinematic analysis of each component of the mechanism must be identified.

4.1.1 Applying the Principle of Virtual Work

The principle of virtual work was introduced in Chapter 2 briefly. This section is a much more comprehensive analysis of the process to complete the application of these principles to this mechanism. To recap, Force-Deflection relationships are primarily found using Virtual Work and Virtual Displacements Method (VWVDM). Knowing that work done on an object is the dot product of the force vector (if it is constant with respect to time) and displacement vectors, the virtual work done on an object is the dot product of the force and a virtual displacement. The total virtual work is done by the algebraic sum of the: 1) work due to the force on the virtual displacement, 2) work due to the moment on a virtual angular displacement, and 3) the negative of the work due to any potential energy sources with respect to the generalized coordinate. The total virtual work is given by:

$$\delta W = \sum_i \vec{F}_i \cdot \delta \vec{z}_i + \sum_j \vec{M}_j \cdot \delta \vec{\theta}_j - \sum_k \frac{dV_k}{dq_k} \delta q_k$$

where:

$\vec{F}_i$ - Force vector

$\delta \vec{z}_i$ - Virtual displacement

$\vec{M}_j$ - Moment

$\delta \vec{\theta}_j$ – Virtual angular displacement

V_k – Potential energy sources

q_k – Generalized coordinate

Figure 13 details the chosen coordinate systems for each linkage as well as the angles and how they are referenced. The chosen generalized coordinate is $q=\theta_1$ and will be the angular reference for the entire analysis. The origin is placed at point O_1; the displacements will be referenced from this point. Each number will be the link number, each point located off of a link may be a force and or moment. Each angle is taken from the positive *x*-axis. Every *z*-vector will have an *a*-component and a *b*- component along that link to point *P*.

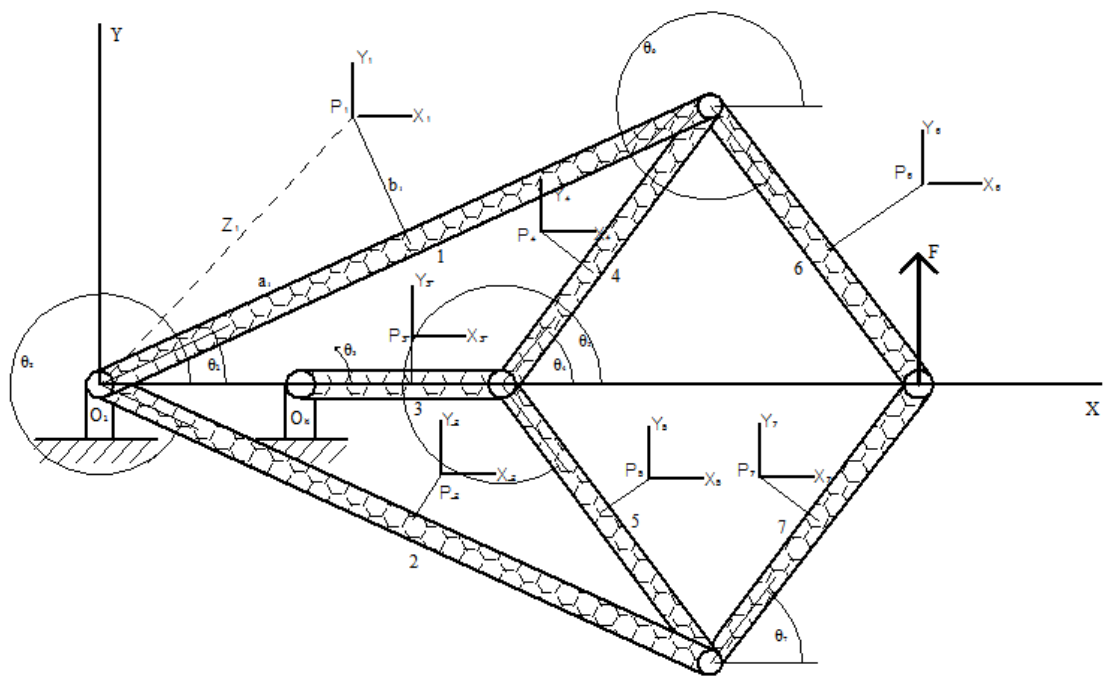

Figure 13 - Schematic of Peaucellier Lipkin Linkage

The equations below have been derived from the above diagram. The first set of equations are Displacement Vectors. These vectors are meant to

characterize the point where a force may act upon each link. The analysis will only focus on the point where the force is most desired: Point *F*. The full analysis is provided for future work to account for the effects of gravity on the mechanism and for the potential addition or subtraction of elements of the Peaucellier-Lipkin Linkage. Note that L is to be considered as the length of the link.

$$z_1 = (a_1 \cos\theta_1 - b_1 \sin\theta_1)\hat{\imath} + (a_1 \sin\theta_1 + b_1 \cos\theta_1)\hat{\jmath}$$

$$z_2 = (a_2 \cos(2\pi - \theta_2) + b_2 \sin(2\pi - \theta_2))\hat{\imath} + (-a_2 \sin(2\pi - \theta_2) + b_1 \cos(2\pi - \theta_2))\hat{\jmath}$$

$$z_3 = (a_3 \cos\theta_3 + b_3 \cos\theta_3)\hat{\jmath}$$

$$z_4 = (L_3 \cos\theta_3 + a_4 \cos\theta_4 - b_4 \sin\theta_4)\hat{\imath} + (L_3 \sin\theta_3 + a_4 \sin\theta_4 - b_4 \cos\theta_4)\hat{\jmath}$$

$$z_5 = (L_3 \cos\theta_3 + a_5 \cos(2\pi - \theta_5) + b_5 \sin(2\pi - \theta_5))\hat{\imath}$$
$$+ (L_3 \sin\theta_3 - a_5 \sin(2\pi - \theta_5) + b_5 \cos(2\pi - \theta_5))\hat{\jmath}$$

$$z_6 = (L_3 \cos\theta_3 + L_4 \cos\theta_4 + a_6 \cos(2\pi - \theta_6) + b_6 \sin(2\pi - \theta_6))\hat{\imath}$$
$$+ (L_3 \sin\theta_3 + L_4 \sin\theta_4 - a_6 \sin(2\pi - \theta_6) + b_6 \cos(2\pi - \theta_6))\hat{\jmath}$$

$$z_7 = (L_3 \cos\theta_3 + L_5 \cos(2\pi - \theta_5) + a_7 \cos\theta_7 - b_7 \sin\theta_7)\hat{\imath}$$
$$+ (L_3 \sin\theta_3 + L_5 \sin(2\pi - \theta_5) + a_7 \sin\theta_7 - b_7 \cos\theta_7)\hat{\jmath}$$

$$z_F = (L_3 \cos\theta_3 + L_4 \cos\theta_4 - L_6 \cos(2\pi - \theta_6))\hat{\imath} + (L_3 \sin\theta_3 + L_4 \sin\theta_4 - L_6 \sin(2\pi - \theta_6))\hat{\jmath}$$

The virtual displacements are simply the derivative of the virtual displacements with respect to the generalized coordinate $q=\theta_1$. The purpose

of the virtual displacements is to find the work due to the sum of the forces on the virtual displacements.

$$\delta z_1 = (-a_1 \sin\theta_1 - b_1 \cos\theta_1)\delta\theta_1 \hat{\imath} + (a_1 \cos\theta_1 - b_1 \sin\theta_1)\delta\theta_1 \hat{\jmath}$$

$$\delta z_2 = \frac{d\theta_2}{d\theta_1}[(-a_2 \sin\theta_2 - b_2 \cos\theta_2)\delta\theta_1 \hat{\imath} + (a_2 \cos\theta_2 - b_2 \sin\theta_2)\delta\theta_1 \hat{\jmath}]$$

$$\delta z_3 = \frac{d\theta_3}{d\theta_1}[(-a_3 \sin\theta_3)\delta\theta_1 \hat{\imath} + (b_3 \cos\theta_3)\delta\theta_1 \hat{\jmath}]$$

$$\delta z_4 = \left[\frac{d\theta_3}{d\theta_1}(-L_3 \sin\theta_3) - \frac{d\theta_4}{d\theta_1}(a_4 \sin\theta_4 + b_4 \cos\theta_4)\right]\delta\theta_1 \hat{\imath}$$
$$+ \left[\frac{d\theta_3}{d\theta_1}(L_3 \cos\theta_3) + \frac{d\theta_4}{d\theta_1}(a_4 \cos\theta_4 - b_4 \sin\theta_4)\right]\delta\theta_1 \hat{\jmath}$$

$$\delta z_5 = \left[\frac{d\theta_3}{d\theta_1}(-L_3 \sin\theta_3) - \frac{d\theta_5}{d\theta_1}(a_5 \sin\theta_5 + b_5 \cos\theta_5)\right]\delta\theta_1 \hat{\imath}$$
$$+ \left[\frac{d\theta_3}{d\theta_1}(L_3 \cos\theta_3) + \frac{d\theta_5}{d\theta_1}(a_5 \cos\theta_5 - b_5 \sin\theta_5)\right]\delta\theta_1 \hat{\jmath}$$

$$\delta z_6 = \left[\frac{d\theta_3}{d\theta_1}(-L_3 \sin\theta_3) + \frac{d\theta_4}{d\theta_1}(-L_4 \sin\theta_4) - \frac{d\theta_6}{d\theta_1}(a_6 \sin\theta_6 + b_6 \cos\theta_6)\right]\delta\theta_1 \hat{\imath}$$
$$+ \left[\frac{d\theta_3}{d\theta_1}(L_3 \cos\theta_3) + \frac{d\theta_4}{d\theta_1}(L_4 \cos\theta_4) + \frac{d\theta_6}{d\theta_1}(a_6 \cos\theta_6 - b_6 \sin\theta_6)\right]\delta\theta_1 \hat{\jmath}$$

$$\delta z_7 = \left[\frac{d\theta_3}{d\theta_1}(-L_3 \sin\theta_3) + \frac{d\theta_5}{d\theta_1}(-L_5 \sin\theta_5) - \frac{d\theta_7}{d\theta_1}(a_7 \sin\theta_7 + b_7 \cos\theta_7)\right]\delta\theta_1 \hat{\imath}$$
$$+ \left[\frac{d\theta_3}{d\theta_1}(L_3 \cos\theta_3) + \frac{d\theta_5}{d\theta_1}(-L_5 \cos\theta_5)\right.$$
$$\left. + \frac{d\theta_7}{d\theta_1}(a_7 \cos\theta_7 - b_7 \sin\theta_7)\right]\delta\theta_1 \hat{\jmath}$$

$$\delta z_F = \left[\frac{d\theta_3}{d\theta_1}(-L_3 \sin\theta_3) + \frac{d\theta_4}{d\theta_1}(-L_4 \sin\theta_4) + \frac{d\theta_6}{d\theta_1}(-L_6 \sin\theta_6)\right]\delta\theta_1 \hat{\imath}$$

$$+ \left[\frac{d\theta_3}{d\theta_1}(L_3 \cos\theta_3) + \frac{d\theta_4}{d\theta_1}(L_4 \cos\theta_4) + \frac{d\theta_6}{d\theta_1}(L_6 \sin\theta_6)\right]\delta\theta_1 \hat{\jmath}$$

There are several unknown terms that are the result of the virtual displacement derivations. These include $\frac{d\theta_2}{d\theta_1}, \frac{d\theta_3}{d\theta_1}, \frac{d\theta_4}{d\theta_1}, \frac{d\theta_5}{d\theta_1}, \frac{d\theta_6}{d\theta_1}, \frac{d\theta_7}{d\theta_1}$ and will be found in the next section using a kinematic analysis.

4.1.2 Kinematic Analysis

The kinematic analysis is performed using complex number representations. There are 3 loops to be performed with a total of 12 vectors.

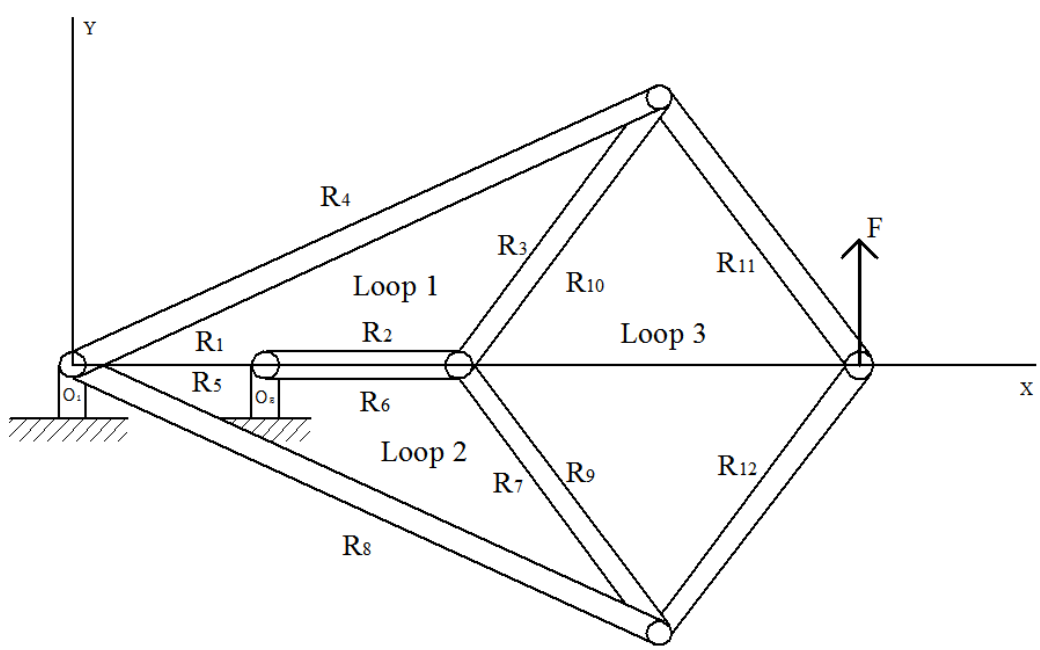

Figure 14 - Loop Equation Diagram

The three loop equations are:

$$r_1 + r_2(\cos\theta_2{}^* + i\sin\theta_2{}^*) + r_3(\cos\theta_3{}^* + i\sin\theta_3{}^*) - r_4(\cos\theta_4{}^* + i\sin\theta_4{}^*) = 0$$

$$r_8(\cos\theta_8{}^* + i\sin\theta_8{}^*) - r_7(\cos\theta_7{}^* + i\sin\theta_7{}^*) - r_6(\cos\theta_6{}^* + i\sin\theta_6{}^*) - r_5 = 0$$

$$r_9(\cos\theta_9{}^* + i\sin\theta_9{}^*) + r_{12}(\cos\theta_{12}{}^* + i\sin\theta_{12}{}^*) - r_{11}(\cos\theta_{11}{}^* + i\sin\theta_{11}{}^*) + r_{10}(\cos\theta_{10}{}^* + i\sin\theta_{10}{}^*) = 0$$

These are found using key relationships. Note that this analysis uses dissimilar definitions for the angles and lengths. These are converted at the end of the analysis to provide a similarity to previously mentioned definitions. The definitions for this analysis will be denoted using a superscript asterisk (*).

Derivatives of both the real and imaginary parts of each loop reveals the unknown terms in the previous section. Each loop will result in the generation of equations for relating some of these terms to another: 6 equations (3 real and 3 imaginary) for 6 unknowns. The terms represent the change of one angle with respect to the generalized coordinate. Solving the derivatives of the real and imaginary parts are accomplished using matrix algebra and Cramer's rule as shown in the demonstration below.

$$r_1 + r_2(\cos\theta_2{}^* + i\sin\theta_2{}^*) + r_3(\cos\theta_3{}^* + i\sin\theta_3{}^*) - r_4(\cos\theta_4{}^* + i\sin\theta_4{}^*) = 0$$

Splitting the equation into real and imaginary components yields two equations:

$$r_1 + r_2 \cos {\theta_2}^* + r_3 \cos {\theta_3}^* - r_4 \cos {\theta_4}^* = 0 \quad (REAL)$$

$$r_2 \sin {\theta_2}^* + r_3 \sin {\theta_3}^* - r_4 \sin {\theta_4}^* = 0 \quad (IMAGINARY)$$

Taking derivatives of the above equations and placing them into matrix form:

$$\begin{bmatrix} r_2 \sin {\theta_2}^* & r_3 \sin {\theta_3}^* \\ r_2 \cos {\theta_2}^* & r_3 \cos {\theta_3}^* \end{bmatrix} \begin{bmatrix} \frac{d{\theta_2}^*}{d{\theta_4}^*} \\ \frac{d{\theta_3}^*}{d{\theta_4}^*} \end{bmatrix} = \begin{bmatrix} r_4 \sin {\theta_4}^* \\ r_4 \cos {\theta_4}^* \end{bmatrix}$$

Now, by using Cramer's rule, the terms in the variable matrix can be solved for as:

$$\frac{d{\theta_2}^*}{d{\theta_4}^*} = \frac{r_4(\sin({\theta_4}^* - {\theta_3}^*))}{r_2(\sin({\theta_2}^* - {\theta_3}^*))}$$

and,

$$\frac{d{\theta_3}^*}{d{\theta_4}^*} = \frac{r_4(\sin({\theta_2}^* - {\theta_4}^*))}{r_3(\sin({\theta_2}^* - {\theta_3}^*))}$$

Loops two and three create differential equations that are not as direct in nature as the equations listed above. Using Matlab R2009a Student Edition and substituting the Virtual terms in for the Kinematic (*) terms, equations for $\frac{d\theta_2}{d\theta_1}, \frac{d\theta_3}{d\theta_1}, \frac{d\theta_4}{d\theta_1}, \frac{d\theta_5}{d\theta_1}, \frac{d\theta_6}{d\theta_1}, \frac{d\theta_7}{d\theta_1}$ can be found. Note that the Matlab code is provided in an appendix at the end of this thesis.

4.1.3 Lagrangian Coordinates

Each joint will have a lagrangian coordinate associated with it at the characteristic pivot. The lagrangian coordinates, denoted by ψ, are used in determining the δψ terms in the total virtual work equation. For example, the lagrangian coordinate at the first characteristic pivot is given by the figure below.

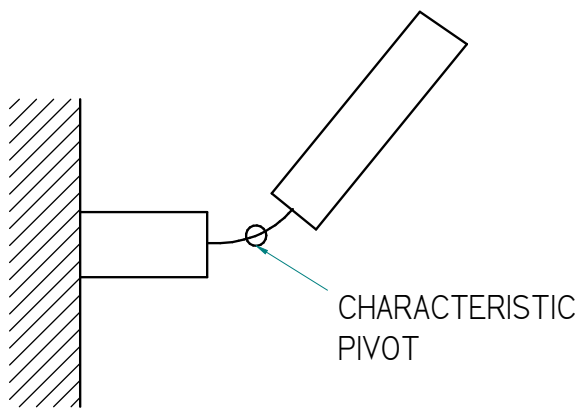

Figure 15 - Lagrangian Coordinate at the Characteristic Pivot

$\Psi_1 = \theta_1 - \theta_{1_0}$ and therefore: $d\Psi_1 = d\theta_1$

Similarly, equations can be found for the rest of the lagrangian coordinates of the characteristic pivots.

$$d\Psi_2 = d\theta_2$$

$$d\Psi_3 = d\theta_3$$

$$d\Psi_4 = d\theta_3 - d\theta_4$$

$$d\Psi_5 = d\theta_3 - d\theta_5$$

$$d\Psi_6 = d\theta_1 - d\theta_6$$

$$d\Psi_7 = d\theta_2 - d\theta_7$$

4.1.4 Angular Positions

The angular positions of the linkages are also needed relative to the generalized coordinate. The analyses of these are made using the kinematic loops described above with trigonometry. These are important for the forthcoming Microsoft Excel driven analysis of each position because they will allow for the angles defined at the beginning of the chapter to be known during the motion of the linkage. For a given θ_1:

$$\theta_2 = \cos^{-1}\left(\frac{r_2^2 + r_{o_2b}^2 - r_5^2}{2r_2 r_{o_2b}}\right)$$

$$\theta_3 = \sin^{-1}\frac{B_y}{r_3}$$

$$\theta_4 = \theta_7 = \pi - \cos^{-1}\left(\frac{r_4^2 - r_1^2 + 2r_1 r_3 \cos\theta_1}{2r_3 r_4}\right)$$

$$\theta_5 = \theta_6 = \pi + \cos^{-1}\left(\frac{r_3^2 + r_5^2 - r_{o_2c}^2}{2r_3 r_5}\right)$$

4.1.5 Force at the Tip

By inputting the values and equations in the previous sections, the final equation solving for the force at the tip can be found. For this, two

major assumptions were made to simplify the final equations. The first assumption is that the forces F_1 through F_7 are taken to be zero as gravitational effects will be ignored. This is because the orientation of the mechanism will influence the ability to be statically balanced. The second assumption is that there are no external moments applied at any point on the links in the mechanism.

With these assumptions in place, we have the following equation for the force at the tip:

$$Y_F = \frac{(T_1 + T_6)\delta\theta_1 + (T_2 + T_7)\delta\theta_2 + (T_3 + T_4 + T_5)\delta\theta_3 - T_4\delta\theta_4 - T_5\delta\theta_5 - T_6\delta\theta_6 - T_7\delta\theta_7}{\frac{d\theta_3}{d\theta_1}(r_3\cos\theta_3) + \frac{d\theta_4}{d\theta_1}(r_4\cos\theta_4) + \frac{d\theta_6}{d\theta_1}(r_6\cos\theta_6)}$$

4.1.6 Mechanism Simplification and Modification

In the current configuration, the linkage consists of three layers: 1) the Peaucellier-Lipkin linkage, 2) the pin-pin initially curved beam and 3) the support for the middle ground point. Upon stacking the mechanisms to get the required motion, the mechanism may be too thick to be considered as a surface. To solve this, the support for the middle point was selected to be removed effectively reducing each operating layer by 33%. It was observed that if the small length flexural pivots are moved off of a common point at O_1, the net effect on producing straight line motion is minimal. A fixed link is then oriented between where the small length flexural pivots were and the

ground point for the middle link. This is represented in figure 16, notice the rigid link attached to the bottom of the mechanism.

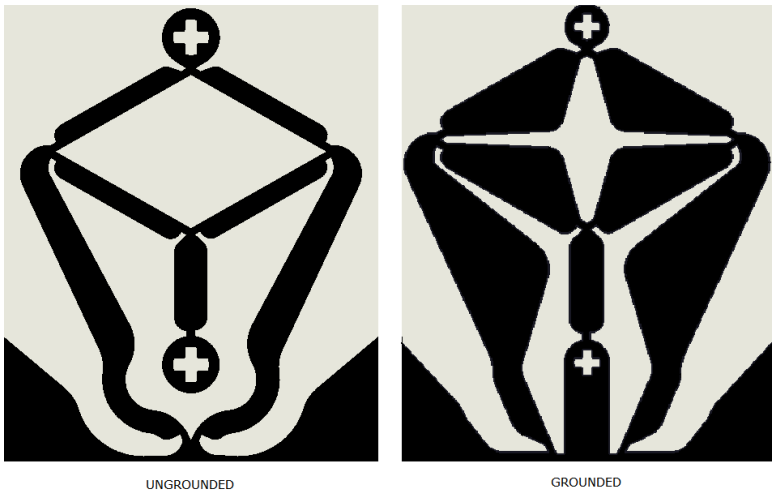

Figure 16 - Comparison of Grounded and Ungrounded Peaucellier-Lipkin Linkage

The second modification to the mechanism has the purpose leaving minimal gaps for physical barrier integrity. The mechanism should not be able to be seen through regardless of the position that it is in. The shapes of the links are modified to help encompass any area that is not needed for the motion. Figure 16 shows this difference as well, the grounded case shows the modified links that will help to contribute to the integrity requirement. Notice how the shapes are modified to fit together when the linkage is moved throughout its motion.

4.2 Initially Curved Pinned-Pinned Beam

As discussed in previous sections, the purpose of the Initially Curved Pinned-Pinned beam is to provide static balancing. The analysis is largely provided by Howell as a Pseudo-Rigid-Body model. In the derivation, there are two characteristic pivots each with a modeled torsion spring. The force is always oriented in-between the two pins on the mechanism and there are no induced moments during rotation. This is the primary reason this can be modeled as a simple spring as required for the static balancing condition.

The pins also allow free rotation and disassembly of prototypes when they are not in use. The ability to disassemble them was covered in previous sections because the prototyping material is very susceptible to creep over a short period of time. The necessary equations from Howell to characterize the model are shown below. The initial position of the beam is given by:

$$\frac{a_i}{l} = \frac{2}{k_o} \sin \frac{k_o}{2}$$

$$\frac{b_i}{l} = \frac{1}{k_o} \left(1 - \cos \frac{k_o}{2}\right)$$

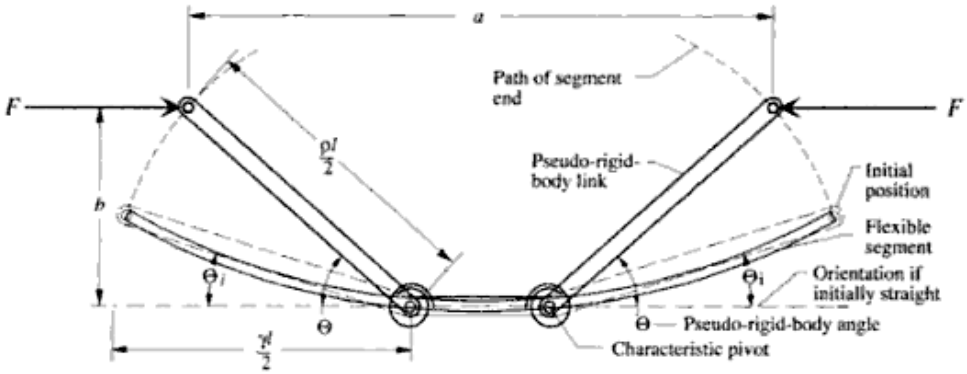

Figure 17 - Pinned-Pinned Compliant Beam with Initial Curvature (Reproduced with Permission)

The initial angle (Θ_i) and the x-y coordinates of the end (a,b) are:

$$\Theta_i = \tan^{-1}\frac{2b_i}{a_i - l(1-\gamma)}$$

$$\frac{a}{l} = 1 - \gamma + \rho\cos\Theta$$

$$\frac{b}{l} = \frac{\rho}{2}(\sin\Theta)$$

The stiffness coefficient is given by the empirical formula:

$$K_\theta = 2.568 - 0.028k_o + 0.137{k_o}^2$$

The spring constant is therefore:

$$K = 2\rho K_\Theta \frac{EI}{l}$$

Finally, the force generated in the beam is:

$$F = \frac{K(\Theta - \Theta_i)}{b}$$

Certain characteristics are also required and are based on empirical data obtained and published by Howell. The characteristics are used in solving the aforementioned equations and are based on the initial curvature k_o.

Table 5 - Pseudo-Rigid-Body Characteristics for Initially Curved Pinned-Pinned Beam (Reproduced with permission)

k_o	γ	ρ	K_Θ
0.5	0.793	0.791	2.59
0.75	0.787	0.783	2.62
1	0.783	0.775	2.68
1.25	0.779	0.768	2.75

4.3 Stress Analysis

The highest stress is caused by bending at the characteristic pivots within the short length flexural pivots. For beams in bending, the maximum stress occurs at the outermost fibers at the fixed end when the beam is cantilevered. The maximum stress is given by a set of equations provided by Howell and are shown below.

$$\sigma_{top} = \frac{-c(Pa + nPb)}{I} - \frac{nP}{A}$$

$$\sigma_{bottom} = \frac{c(Pa + nPb)}{I} - \frac{nP}{A}$$

Since the pivots have small forces and relatively low deflections, the stress is well within the limits of the polypropylene material. These equations should be used in any analysis to determine if the material chosen is correct for the application.

For the Initially Curved Pinned-Pinned beam, the maximum stress occurs at the midpoint of the segment. As before, the equations for this stress are provided by Howell and are listed below. Note that c is the distance from the neutral axis to the outermost fiber of the beam.

$$\sigma_{max} = \pm\frac{Fbc}{I} - \frac{F}{A}$$

CHAPTER 5: IMPLIMENTATION INTO THE UNIT CELL

The concept of the unit cell is for the use of multiple tiled cells that work in tandem to create a shape shifting surface. The unit cell will require multiple layers to satisfy the integrity requirement of the Shape-Shifting-Surface. Each layer may have one or more statically balanced Peaucellier-Lipkin linkages that were discussed in chapter 4. This chapter will discuss how the Peaucellier-Lipkin linkages are packaged together, the assembly methods, more detailed information on how the prototypes are made, and the constraints on the prototypes.

5.1 Packaging

The chronology of events leading to the final packaging method is not discussed in this section. Each layer of the final packaging will contain two Peaucellier-Lipkin Linkages oriented orthogonally to each other. The layers will then be stacked on top of each other in order to have the proper number of degrees of freedom in the overall unit cell.

One major issue in this orientation is the working envelope is always outside of the points that connect one cell to another. This cannot occur

because it may have improper ramifications on the ability of each adjacent cell. To solve this issue, an extension is placed at the moving tip of the Peaucellier-Lipkin Linkage to maintain the proper distance to the next cell and to keep one unit cell from interfering with another (see figure 18). The problem with this is that even though the point at the end of the Peaucellier-Lipkin Linkage moves in a straight line, the point actually rotates. This in turn will rotate the extension. The best solution for the rotation is to constrain the extension in a guide way.

This is not the ideal case however. The extension will increase friction in the mechanism which is against the better judgment of the author. It is assumed that some material can be used to reduce this friction. Since the provision for static balancing has been completed, the friction does nothing more than generate a small resistive force in the mechanism. For now, this is a shortfall of the packaging but it allows for a much more reduced overall size for the thickness. If interference with adjacent cells can be tolerated, the guide ways may be removed.

5.2 Assembly

The assembly of the unit cell consists of multiple layers. Each layer encompasses two sub-layers. One sub layer is the Peaucellier-Lipkin Linkage layer. This linkage, as discussed in the previous section, has two Peaucellier-Lipkin Linkages oriented orthogonally to each other. The next sub layer on top of the Peaucellier-Lipkin Linkage layer is the balancer layer. Two total

balancers are attached to the Peaucellier-Lipkin Linkage layer, one for each Peaucellier-Lipkin Linkage.

The attachment of the balancers (Initially Curved Pinned-Pinned segment) is via pins to specified points on the Peaucellier-Lipkin Linkage. One end is attached to the ground point at one end of the linkage while the other is attached to the end of the linkage where the restoring force acts. These pins allow transmission of forces while allowing free rotation between the Peaucellier-Lipkin Linkage and the Initially Curved Pinned-Pinned segment. Any binding on the Initially Curved Pinned-Pinned segment may change the behavior of the segment to act more as a cantilevered beam. This would irreparably change the characteristics and may result in a non-balanced condition.

On each sub layer, there are two constraining layers. The purpose for these layers is to constrain the sliders to have zero motion out of plane. Constraining layers are attached to the sub layer in such a way as to not add additional thickness. This is accomplished by allowing the constraining layer to occupy an area that is not otherwise occupied by any part of the mechanism. This is shown in figure 18.

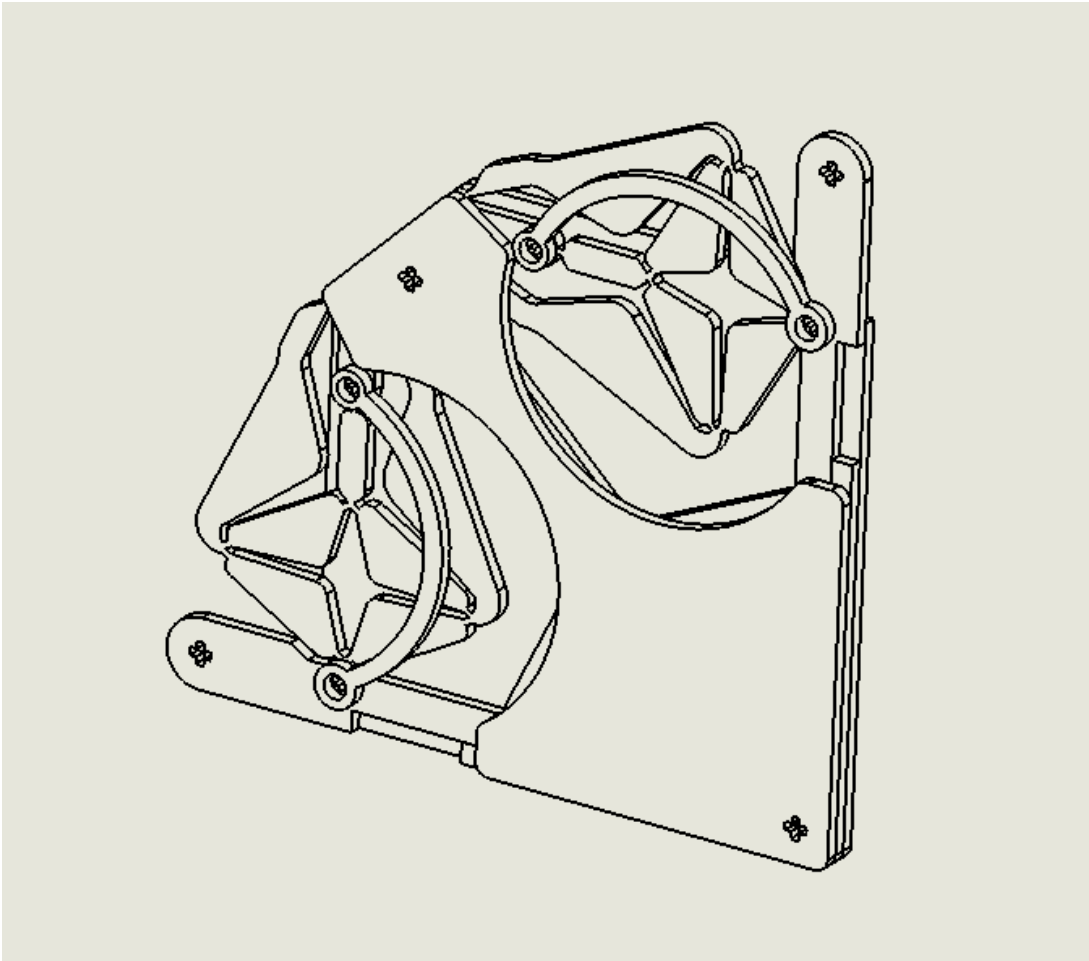

Figure 18 - Sub-Assembly of Statically Balanced Compliant Unit Cell

An added benefit to the constraining layer is that by occupying an area that is not otherwise occupied, it can help maintain the integrity of the overall mechanism. These layers will not move with respect to the sub layer and will thus not interfere with any moving parts of the sub layer.

Each sub layer is then affixed to each other via pins that do not allow for free rotation. The pins are attached at the outermost points on the extensions. The purpose of constraining free rotation in this case is that no

solution has been found for statically balancing joints. This will prohibit the mechanism from operating in shear, thus only having 4 degrees of freedom for the overall mechanism. The solution for statically balancing the mechanism in shear is out of the scope of this thesis and will be delegated to future work. The complete mechanism is shown in the picture below.

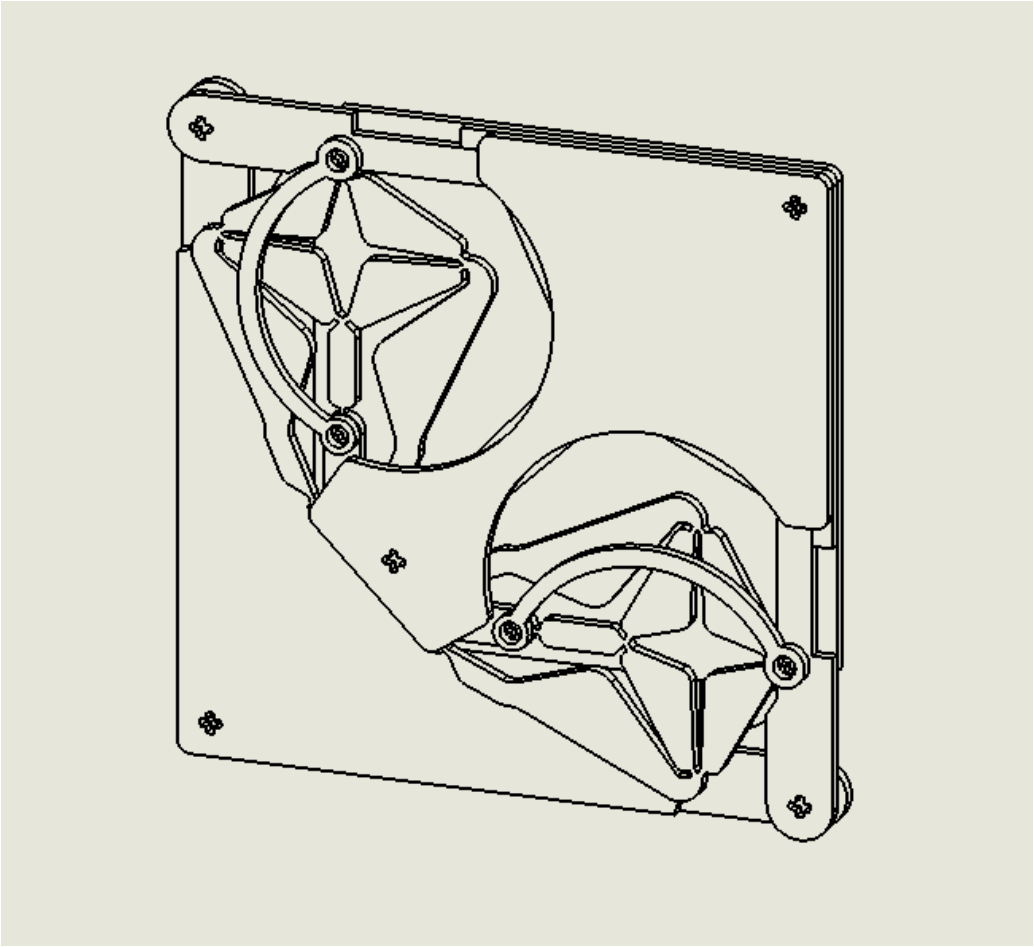

Figure 19 - Statically Balanced Compliant Unit Cell

The combinations of the sub layers are called the unit cell. Unit cells are attached to one another at the same points that attach sub layers to one

another. The layers may have to be offset from each other to accomplish this.

5.3 Fabrication Method

The fabrication has been discussed briefly in previous sections. The equipment used in producing these prototypes is an 85 watt CO_2 laser that uses CNC control. The equipment is provided by Craig Lusk, Ph.D. of the University of South Florida. The author was trained on its use by Paul Montalbano. Some parts of the iterations of the mechanism were manufactured by Brian Gassaway on the same equipment.

The process for manufacturing included first creating a Solidworks model of the part to be manufactured. An AutoCAD format .dxf drawing file is then created in the Solidworks software. This file is then imported into a CNC software that the laser machine can identify.

Issues with this manufacturing method have been discussed previously and it has been shown that the issues can be accounted for to produce very accurate prototypes. A Shape-Shifting-Surface may be manufactured using a similar method depending on the size of the unit cells. Micro-sized unit cells may need the use of nano-manufacturing methods because of the high degree of dimensional accuracy needed in the flexible members.

CHAPTER 6: RESULTS AND EVALUATION

The purpose of this chapter is to offer the reader information on the effectiveness and adequacy of the prototypes while discussing the weaknesses and limitations. This chapter is meant to expand upon information presented throughout the body of the thesis.

6.1 Effectiveness

The effectiveness of the mechanism that is presented during this thesis will be described in this section. Overall, the mechanism operates as intended and allows a stepping stone for future work to be completed on the subject.

The unit cell as well as the Peaucellier-Lipkin linkage does exhibit the desired behavior of the static balancing condition. This condition is such that, if the mechanism is moved to a position, it remains in said position until another force is applied to move the unit cell. The purpose for this condition is that it implies that the mechanism needs minimal forces to move the mechanism and a zero force magnitude to maintain its position. The balance of the forces in the mechanism can be shown as a graph using the

aforementioned equations of chapter 4. The graph is shown below and is a theoretical representation of what the mechanism is doing throughout its motion.

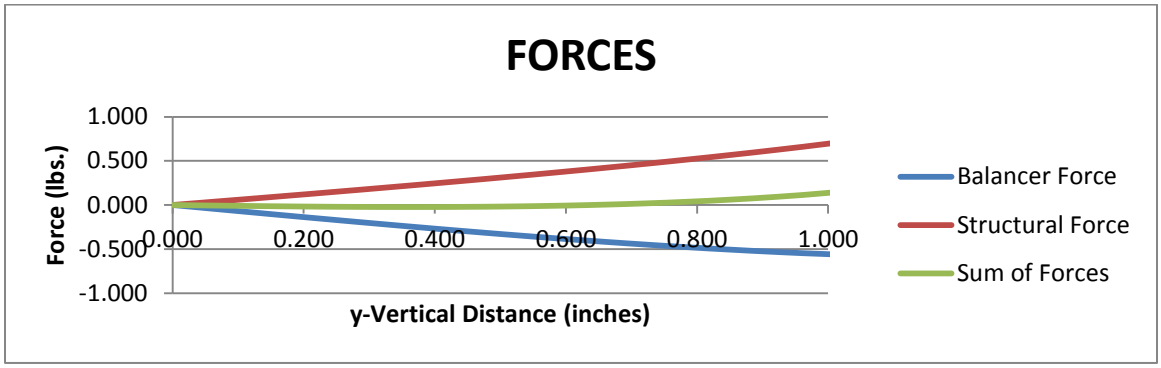

Figure 20 - Calculated Forces

The static balancing condition is met in 4 degrees of freedom, all of which are linear motions. There are constraints that the cell will always remain in the shape of a quadrilateral. Future work may include additional shapes for a unit cell, possibly of the form of triangles, pentagons, hexagons and so forth. These would presumably be using the Modified Compliant Peaucellier-Lipkin linkage (MCPL) in conjunction with its balancing segment. The overall shape of the sub assembly would however need to change and will be discussed in future work.

The adequacy of this mechanism is well defined throughout the thesis. The mechanism performs its specified task, well within the limitations of the material. Future work will reduce or eliminate the limitations that will be discussed in the next section.

6.2 Limitations

The limitations have also been discussed throughout this thesis. They will be summarized in this section. The basic limitations of this process include limitations in materials, range of motion, and packaging.

The material used in prototyping was polypropylene sheet of ¼ inch thickness. During manufacture, the material was locally melted and blown out using the aforementioned laser. There was a substantial heat affected zone that may have affected the performance of the small length flexural pivots. More in depth study on this matter is delegated to future work. The material did allow for great flexibility but does create limitations on how thin the small length flexural pivots can be.

The range of motion is small for the overall size of the mechanism. For a mechanism 3 inches in height, it can only move approximately 1 total inch. The more ideal case would be a mechanism whose deflection capability is approximately the same as its size.

The packaging presents further problems by adding unwanted friction by necessitating the use of sliders to maintain the mounting points. The friction may be overcome using different materials or coatings. Another packaging issue is the overall thickness of the mechanism as compared to the area that it covers. This will again be delegated as an improvement in future work.

CHAPTER 7: CONCLUSION

This chapter is meant to summarize the paper as well as provide insight into future work that may be beneficial to the future of shape shifting surfaces. Shape Shifting surfaces are a frontier science and allow many potential opportunities in manufacturing, health and control surfaces. The potential uses for this product are seemingly limitless.

7.1 Conclusion

The purpose of this research was to create a statically balanced Shape-Shifting Surface composed of multiple tiled cells. The term statically balanced referring to the absence or near absence of forces within the mechanism. This requirement will allow for a zero or near zero force input for maintaining a specific shape and little actuation force to move the unloaded system.

The unit cells may be designed in various shapes including squares, rectangles and triangles. Macro sized prototypes are constructed from uniform thickness polypropylene sheets using a CNC laser cutter. The

prototypes are meant to be a proof of concept as scaling the surface down to smaller sizes requires nano or micro manufacturing techniques.

The mechanism that was created during this research has been shown to operate as intended, both mathematically and physically. Once assembled, the mechanism has clear rigid-body-mechanism operation in the format of a compliant mechanism. The net forces produced are at or very near zero. The mechanism is two dimensional in nature but may be tiled in such a way as to allow for three-dimensional statically balance cubes. Once tiled together, a surface may be constructed that will allow for a low energy shape-shifting-surface.

Issues with the work mentioned in this thesis include manufacturing, small range of motion compared to the overall size of the mechanism and the introduction of unwanted friction in the form of sliders. The manufacturing defects stemmed from the use of polypropylene, a low melting point polymer that made replication of the small length flexural pivots challenging. The small range of motion compared to the overall size of the mechanism is limited by how far the Peaucellier-Lipkin linkage can move. Most notably, the second ground point prohibits the movement of the outermost links (Link 1 and 2). The issues with unwanted friction in the case of the sliders are necessary because even though the linkage replicates straight line motion, the point where the force acts is rotating. The sliders are therefore meant to keep the point from rotating, thus allowing attachment of other layers to contribute to the surface integrity requirement.

My contribution to this field is the demonstration that a unit cell comprised of compliant mechanisms can be made into a zero or near zero force unit cells by means of static balancing. This is critical to reducing the power requirement to operate Shape-Shifting-Surfaces.

7.2 Future Work

The first candidate for future work is to increase the overall deflection relative to the size of the mechanism. This will be important for allowing large movements of the completed Shape-Shifting-Surface. The overall deflection may be increased by offering a slight redesign in the shapes of the linkages to allow the links to wrap around the second ground point.

Another candidate for future work is scaling the mechanism to a size more suitable for integration into a Shape-Shifting-Surface. Scaling the mechanism may be done via multiple methods but the most obvious and drastic method will be nano or micro-manufacturing. If the cells can be adequately reduced to this scale, surfaces similar to cloth may be possible.

The last candidate for future work will be the controls and actuation system. The required system will need to be very small, a requirement helped by the addition of low or zero force static balancing. The system will need to be computer interfaced and may be similar in structure to the charge-coupled device (CCD) used in digital imaging. In fact, the actuation mechanisms themselves may be very similar to the CCD. The challenges in

this case will be in the material used. An additional source of actuation may lay in the use of smart materials whose length changes with temperature or current.

WORKS CITED

1. Merriam-Webster. Shape-Shifter. *Merriam-Webster.* [Online] [Cited: August 12, 2011.] http://www.merriam-webster.com/dictionary/shapeshift.

2. *Design Concepts for Shape Shifting Surfaces.* Lusk, C. and Montalbano, P. Washington, District of Columbia, USA : s.n., 2011. ASME International Design Engineering Technical Conferences & Computers and Information in Engineering Conference. DETC2011-47402.

3. *A Building Block Approach for the Design of Statically Balanced Compliant Mechanisms.* Hoetmer, Karin, Herder, Just L and Kim, Charles. San Diego, California, USA : s.n., 2009. 2009 International Design Engineering Technical Conference. Vols. DETC2009-87451.

4. Blackstock, Uche A and Sinert, Richard H. Dilated Cardiomyopathy in Emergency Medicine . *Medscape.* [Online] [Cited: August 1, 2011.] http://emedicine.medscape.com/article/757668-overview.

5. Tsao, Brian and Armon, Carmel. Spinal Muscular Atrophy . *Medscape.* [Online] [Cited: August 1, 2011.] http://emedicine.medscape.com/article/1181436-overview#a0199.

6. *Thermal and UV Shape Shifting of Surface Topography.* Yang, Zhongqiang, et al., s.l. : Journal of the American Chemical Society, 2006, Vol. 128(4). 10.1021/ja056866s.

7. *Active Skin for Turbulent Drag Reduction.* Rediniotis, Othon K., et al., s.l. : SPIR-International Society for Optics and Photonics, 2002. 10.1117/12.475023.

8. Cleghorn, W.L. *Mechanics of Machines.* New York : Oxford, 2005. 978-0-19-5154528.

9. Howell, Larry L. *Compliant Mechanisms.* New York : Wiley, 2001. 0-471-38478-X.

10. McEwen, E, Miller, R I and Gergman, C A. Early Bow Design and Construction. *Scientific American.* 1991, Vol. 264, June, pp. 76-82.

11. *Criteria for the Static Balancing of Compliant Mechanisms.* Gallego, Juan A and Herder, Just. Montreal, Quebec, Canada : s.n., 2010. International Design Engineering Technical Conference. Vols. DETC2010-28469.

12. Herder, J.L. Energy-Free Systems. Theory, Conception and Design of Statically Balanced Spring Mechanisms. [Ph.D Thesis]. s.l. : Delft University of Technology, 2001.

13. Ugural, Ansel C. and Fenster, Saul K. *Advanced Strength and Applied Elasticity, Fourth Edition.* Upper Saddle River, New Jersey, USA : Prentice Hall Professional Technical Reference, 2010. 978-0130473929.

14. Elastic Modulus. *Wikipedia, the free encyclopedia.* [Online] [Cited: October 12, 2011.] http://en.wikipedia.org/wiki/Elastic_modulus.

15. Askeland, Donald R. and Phule, Pradeep P. *The Science and Engineering of Materials, 5th Edition.* Southbank, Victoria, Australia : Thomson, 2006. p. 198.

16. Preparata, Franco P and Shamos, Michael I. *Computational Geometry: An Introduction.* Berlin : Springer, 1985. 978-0387961316.

17. Shames, I. H. and Dym, Clive L. *Energy and Finite Element Methods in Stuctural Mechanics.* New York : Taylor & Francis, 1991. 978-0891169420.

18. Norton, Robert L. *Machine Design: An Integrated Approach.* Upper Saddle River, NJ : Pearson Prentice Hall, 2006. 978-0131481909.

19. Henderson, D. W. *Experiencing Geometry: In Euclidean, Spherical, and Hyperbolic Spaces: 2nd Edition.* Upper Saddle River, NJ : Prentice Hall, 2001. 978-0130309532.

20. Taimina, Daina. How to Draw a Straight Line. *Kinematic Models for Design - Digital Library.* [Online] Cornell University. [Cited: August 12, 2011.] http://kmoddl.library.cornell.edu/tutorials/04/.

21. Scott, Paul. Peaucellier-Lipkin Linkage. [Online] [Cited: August 12, 2011.] http://web.me.com/paulscott.info/linkages/6peaucellier.html.

22. *A Constant Force Generation Mechanism.* Nathan, R. H. Dec., s.l. : ASME, 1985, Journal of Mechanisms, Transmissions, and Automation in Design, Vol. 107, pp. 508-512.

23. *Design of an Exact Constant Force Generating Mechanism.* Jenuwine, J. G. and Midha, A. Cincinnati, Ohio, USA : s.n., 1989. Proceedings of the First National Applied Mechanisms and Robotics Conference. Vol. II, pp. 10B-4-1 to 10B-4-5.

24. *Synthesis of Single-Output and Multiple Output Port Mechanisms with Springs for Specified Energy Absorption.* Jebuwine, J. G. and Midha, A. 3, s.l. : ASME, September 1994, Journal of Mechanical Design, Vol. 116, pp. 937-943.

25. Murphy, M. D. *A Generalized Theory for the Type Synthesis and Design of Compliant Mechanisms.* Purdue University. West Lafayette, Indiana, USA : s.n., 1993. Ph.D dissertation.

26. Midha, A., Murphy, M.D. and Howell, L.L. *Compliant Constant Force Mechanism and Devices Formed Therin. Patent 5,649,454.* Print.

27. *Dimensional Synthesis of Compliant Constant-Force Slider Mechanisms.* Howell, L. L., Midha, A. and Murphy, M.D. s.l. : ASME, 1994. Machine Elements and Machine Dynamics: Proceedings of the 1994 ASME Mechanisms Conference. Vols. 71, pp. 509-515.

28. *Methodology for the Design of Compliant Mechanisms Employing Type Synthesis Techniques with Example.* Murphy, M.D., Midha, A. and Howell, L.L. 1994. Mechanism Synthesis and Analysis: Proceedings of the ASME Mechanisms Conference. Vols. 70, pp.61-66.

29. What is Cardiomyopathy? *National Heart, Lung and Blood Institute.* [Online] [Cited: August 29, 2011.] http://www.nhlbi.nih.gov/health/health-topics/topics/cm/.

30. *Synthesis Methods in Compliant Mechanisms: An Overview.* Gallego, J. A. and Herder, J. L. San Diego, California, USA : s.n., 2009. Design Engineering Technical Conferences & Computers and Information in Engineering Conference. DETC2009-86845.

31. *Parametric Deflection Approximations for End-Loaded, Large-Deflection Beams in Compliant Mechanisms.* Howell, L. L. and Midha, A. 1, s.l. : ASME Journal of Mechanical Design, 1995, Vol. 117, pp. 156-165.

32. *Evaluation of Equivalent Spring Stiffness for Use in a Pseudo-Rigid-Body Model of Large-Deflection Compliant Mechanisms.* Howell, L.L., Midha A., and Norton, T.W. s.l. : ASME Journal of Mechanical Design, 2006, Vol. 118, pp. 126-131.

33. *A Simple and Accurate Method for Determining Large Deflections in Compliant Mechanisms Subjected to End Forces and Moments.* Saxena, A and Kramer, S. N. s.l. : ASME Journal od Mechanical Design, 1998, Vol. 120, pp. 392-400.

34. *Modeling Fixed-Fixed Flexible Segments via the Pseudo-Rigid-Body Model.* Lyon, S. M., Howell, L. L. and Roach, G. M. Orlando, Florida, USA : s.n., 2000. ASME International Mechanical Engineering Congress and Exposition. Vols. 69-2, pp. 883-990.

35. *A Load Independent Pseudo-Rigid-Body 3D Model for Determining Large Deflections of Beams in Compliant Mechanisms.* Su, H. J. New York, New York, USA : ASME Design Engineering Technical Conference & Computers and Information in Engineering Conference, 2008. DETC2008-49041.

36. *Preliminaries for a Compliant Spherical Mechanism: Pseudo-Rigid-Body Model Kinematics.* Jagardir, S. and Lusk, C. Las Vegas, Nevada, USA : s.n., 2007. ASME Design Engineering Technical Conferences. DETC2007-34782.

37. *A Pseudo-Rigid-Body Model for a Spherical Mechanism: The Kinematics and Stiffness of a Compliant Curved Beam.* Leon, A., Jagardir, S. and Lusk, C. New York, New York, USA : s.n., 2008. ASME Design Engineering Technical Conference & Computers and Information in Engineering Conference. DETC2008-49769.

38. *Dimensional Synthesis of Compliant Constant-Force Slider Mechanisms.* Howell, L.L., Midha, A. and Murphy, M.D. 1994. ASME Design Engineering Technical Conferences. DETC98/MEMD-71.

APPENDIX A : MATLAB CODE FOR VIRTUAL WORK ANALYSIS

```
Student License -- for use in conjunction with courses offered at a
  degree-granting institution.  Professional and commercial use
prohibited.

clear all
syms a b c
A=(sin(a-c))/sin(b-c)

A =

sin(a - c)/sin(b - c)

simplify(A)

ans =

sin(a - c)/sin(b - c)

pretty(A)

  sin(a - c)
  ----------
  sin(b - c)

clear all
syms r6 r8 r9 r10 r11 r12 t6 t8 t9 t10 t11 t12 D64 D84 D94 D104 D114
D124
A = [r6*sin(t6) 0 0 r10*sin(t10) 0 0;r6*cos(t6) 0 0 r10*cos(t10) 0
0;r6*sin(t6) -r8*sin(t8) r9*sin(t9) 0 0 0;r6*cos(t6) -r8*cos(t8)
r9*cos(t9) 0 0 0; 0 0 -r9*sin(t9) r10*sin(t10) r11*sin(t11) -
r12*sin(t12);0 0 r9*cos(t9) -r10*cos(t10) -r11*cos(t11) r12*cos(t12)]

A =

[ r6*sin(t6),           0,           0,  r10*sin(t10),             0,
0]
[ r6*cos(t6),           0,           0,  r10*cos(t10),             0,
0]
[ r6*sin(t6), -r8*sin(t8),  r9*sin(t9),             0,             0,
0]
[ r6*cos(t6), -r8*cos(t8),  r9*cos(t9),             0,             0,
0]
```

```
[          0,           0, -r9*sin(t9),  r10*sin(t10),  r11*sin(t11), -
r12*sin(t12)]
 [          0,           0,  r9*cos(t9), -r10*cos(t10), -r11*cos(t11),
r12*cos(t12)]

X = [D64;D84;D94;D104;D114;D124]

X =

  D64
  D84
  D94
 D104
 D114
 D124

syms r4 t4
B = [r4*sin(t4);r4*cos(t4);0;0;0;0]

B =

 r4*sin(t4)
 r4*cos(t4)
          0
          0
          0
          0

inv(A) * B

ans =


(r4*cos(t4)*sin(t10))/(r6*sin(t10 - t6)) -
(r4*cos(t10)*sin(t4))/(r6*sin(t10 - t6))

(r4*sin(t4)*(sin(t10 + t6 - t9) - sin(t10 - t6 + t9)))/(r8*(cos(t10 -
t6 + t8 - t9) - cos(t10 - t6 - t8 + t9))) + (r4*cos(t4)*(cos(t10 + t6 -
t9) - cos(t10 - t6 + t9)))/(r8*(cos(t10 - t6 + t8 - t9) - cos(t10 - t6
- t8 + t9)))

(r4*sin(t4)*(sin(t10 + t6 - t8) - sin(t10 - t6 + t8)))/(r9*(cos(t10 -
t6 + t8 - t9) - cos(t10 - t6 - t8 + t9))) + (r4*cos(t4)*(cos(t10 + t6 -
t8) - cos(t10 - t6 + t8)))/(r9*(cos(t10 - t6 + t8 - t9) - cos(t10 - t6
- t8 + t9)))

(r4*cos(t6)*sin(t4))/(r10*sin(t10 - t6)) -
(r4*cos(t4)*sin(t6))/(r10*sin(t10 - t6))
                             - (r4*sin(t4)*(cos(t10 - t12 - t6 + t8 -
t9) - cos(t10 - t12 - t6 - t8 + t9) - cos(t10 + t12 + t6 - t8 - t9) +
cos(t10 + t12 - t6 + t8 - t9) + cos(t10 - t12 + t6 + t8 - t9) - cos(t10
```

```
- t12 - t6 + t8 + t9)))/(r11*(sin(t10 + t11 - t12 - t6 + t8 - t9) -
sin(t10 + t11 - t12 - t6 - t8 + t9) - sin(t10 - t11 + t12 - t6 + t8 -
t9) + sin(t10 - t11 + t12 - t6 - t8 + t9))) - (r4*cos(t4)*(sin(t10 -
t12 - t6 + t8 - t9) - sin(t10 - t12 - t6 - t8 + t9) + sin(t10 + t12 +
t6 - t8 - t9) - sin(t10 + t12 - t6 + t8 - t9) - sin(t10 - t12 + t6 + t8
- t9) + sin(t10 - t12 - t6 + t8 + t9)))/(r11*(sin(t10 + t11 - t12 - t6
+ t8 - t9) - sin(t10 + t11 - t12 - t6 - t8 + t9) - sin(t10 - t11 + t12
- t6 + t8 - t9) + sin(t10 - t11 + t12 - t6 - t8 + t9)))
 - (4*r4*cos(t11)*sin(t4)*(cos(t10 - t11 - t6 + t8 - t9)/4 - cos(t10 -
t11 - t6 - t8 + t9)/4 - cos(t10 + t11 + t6 - t8 - t9)/4 + cos(t10 + t11
- t6 + t8 - t9)/4 + cos(t10 - t11 + t6 + t8 - t9)/4 - cos(t10 - t11 -
t6 + t8 + t9)/4))/(r12*sin(t11 - t12)*(cos(t10 - t11 - t6 + t8 - t9) -
cos(t10 - t11 - t6 - t8 + t9) + cos(t10 + t11 - t6 + t8 - t9) - cos(t10
+ t11 - t6 - t8 + t9))) - (4*r4*cos(t11)*cos(t4)*(sin(t10 - t11 - t6 +
t8 - t9)/4 - sin(t10 - t11 - t6 - t8 + t9)/4 + sin(t10 + t11 + t6 - t8
- t9)/4 - sin(t10 + t11 - t6 + t8 - t9)/4 - sin(t10 - t11 + t6 + t8 -
t9)/4 + sin(t10 - t11 - t6 + t8 + t9)/4))/(r12*sin(t11 - t12)*(cos(t10
- t11 - t6 + t8 - t9) - cos(t10 - t11 - t6 - t8 + t9) + cos(t10 + t11 -
t6 + t8 - t9) - cos(t10 + t11 - t6 - t8 + t9)))

pretty(ans)

  +-
-+
  |
r4 cos(t4) sin(t10)   r4 cos(t10) sin(t4)
|
  |
------------------- - -------------------
|
  |
r6 sin(t10 - t6)      r6 sin(t10 - t6)
|
  |
|
  |
r4 sin(t4) (sin(t10 + t6 - t9) - sin(t10 - t6 + t9))     r4 cos(t4)
(cos(t10 + t6 - t9) - cos(t10 - t6 + t9))
|
  |
------------------------------------------------------ + --------------
---------------------------------------
|
  |
r8 (cos(t10 - t6 + t8 - t9) - cos(t10 - t6 - t8 + t9))   r8 (cos(t10 -
t6 + t8 - t9) - cos(t10 - t6 - t8 + t9))
|
  |
|
  |
r4 sin(t4) (sin(t10 + t6 - t8) - sin(t10 - t6 + t8))     r4 cos(t4)
(cos(t10 + t6 - t8) - cos(t10 - t6 + t8))
|
```

```
  |
---------------------------------------------------- + --------------


----------------------------------------
|
  |
r9 (cos(t10 - t6 + t8 - t9) - cos(t10 - t6 - t8 + t9))   r9 (cos(t10 -
t6 + t8 - t9) - cos(t10 - t6 - t8 + t9))
|
  |
|
  |
r4 cos(t6) sin(t4)   r4 cos(t4) sin(t6)
|
  |
------------------ - ------------------
|
  |
r10 sin(t10 - t6)    r10 sin(t10 - t6)
|
  |
|
  |                 r4 sin(t4) (cos(t10 - t12 - t6 + t8 - t9) - cos(t10
- t12 - t6 - t8 + t9) - cos(t10 + t12 + t6 - t8 - t9) + cos(t10 + t12 -
t6 + t8 - t9) + cos(t10 - t12 + t6 + t8 - t9) - cos(t10 - t12 - t6 + t8
+ t9))   r4 cos(t4) (sin(t10 - t12 - t6 + t8 - t9) - sin(t10 - t12 - t6
- t8 + t9) + sin(t10 + t12 + t6 - t8 - t9) - sin(t10 + t12 - t6 + t8 -
t9) - sin(t10 - t12 + t6 + t8 - t9) + sin(t10 - t12 - t6 + t8 + t9))
|
  |               - ---------------------------------------------------
-----------------------------------------------------------------------
-----------------------------------------------------------------------
--------- - --------------------------------------------------------
-----------------------------------------------------------------------
-----------------------------------------------------------------------
-               |
  |                                        r11 (sin(t10 + t11 - t12 -
t6 + t8 - t9) - sin(t10 + t11 - t12 - t6 - t8 + t9) - sin(t10 - t11 +
t12 - t6 + t8 - t9) + sin(t10 - t11 + t12 - t6 - t8 + t9))
r11 (sin(t10 + t11 - t12 - t6 + t8 - t9) - sin(t10 + t11 - t12 - t6 -
t8 + t9) - sin(t10 - t11 + t12 - t6 + t8 - t9) + sin(t10 - t11 + t12 -
t6 - t8 + t9))                                          |
  |
|
  |                          / cos(t10 - t11 - t6 + t8 - t9)   cos(t10
- t11 - t6 - t8 + t9)   cos(t10 + t11 + t6 - t8 - t9)   cos(t10 + t11 -
t6 + t8 - t9)   cos(t10 - t11 + t6 + t8 - t9)   cos(t10 - t11 - t6 + t8
+ t9) \                         / sin(t10 - t11 - t6 + t8 - t9)
sin(t10 - t11 - t6 - t8 + t9)   sin(t10 + t11 + t6 - t8 - t9)   sin(t10
+ t11 - t6 + t8 - t9)   sin(t10 - t11 + t6 + t8 - t9)   sin(t10 - t11 -
t6 + t8 + t9) \  |
```

```
 |    4 r4 cos(t11) sin(t4) | ---------------------------- - ---------
-------------------- - ---------------------------- + ----------------
------------- + ---------------------------- - ----------------------
------ |   4 r4 cos(t11) cos(t4) | ---------------------------- - ----
------------------------- + ---------------------------- - ----------

------------------- - ---------------------------- + -----------------
------------ |  |
  |                           \                4
4                                4                                  4
4                                4                /
\               4                                 4
4                                4                                  4
4               /  |
  |  - ------------------------------------------------------------------
-----------------------------------------------------------------------
-----------------------------------------------------------------------
--------- - ---------------------------------------------------------------
-----------------------------------------------------------------------
-----------------------------------------------------------------------
--------------  |
  |                                       r12 sin(t11 - t12) (cos(t10 -
t11 - t6 + t8 - t9) - cos(t10 - t11 - t6 - t8 + t9) + cos(t10 + t11 -
t6 + t8 - t9) - cos(t10 + t11 - t6 - t8 + t9))
r12 sin(t11 - t12) (cos(t10 - t11 - t6 + t8 - t9) - cos(t10 - t11 - t6
- t8 + t9) + cos(t10 + t11 - t6 + t8 - t9) - cos(t10 + t11 - t6 - t8 +
t9))                                     |
  +-
-+
simplify(ans)

ans =


(r4*sin(t10 - t4))/(r6*sin(t10 - t6))

(r4*(cos(t10 - t4 + t6 - t9) - cos(t10 - t4 - t6 + t9)))/(r8*(cos(t10 -
t6 + t8 - t9) - cos(t10 - t6 - t8 + t9)))

(r4*(cos(t10 - t4 + t6 - t8) - cos(t10 - t4 - t6 + t8)))/(r9*(cos(t10 -
t6 + t8 - t9) - cos(t10 - t6 - t8 + t9)))

(r4*sin(t4 - t6))/(r10*sin(t10 - t6))
 -(r4*(sin(t10 + t12 - t4 + t6 - t8 - t9) - sin(t10 + t12 - t4 - t6 +
t8 - t9) + sin(t10 - t12 + t4 - t6 + t8 - t9) - sin(t10 - t12 + t4 - t6
- t8 + t9) - sin(t10 - t12 - t4 + t6 + t8 - t9) + sin(t10 - t12 - t4 -
t6 + t8 + t9)))/(r11*(sin(t10 + t11 - t12 - t6 + t8 - t9) - sin(t10 +
t11 - t12 - t6 - t8 + t9) - sin(t10 - t11 + t12 - t6 + t8 - t9) +
sin(t10 - t11 + t12 - t6 - t8 + t9)))
 -(r4*cos(t11)*(sin(t10 + t11 - t4 + t6 - t8 - t9) - sin(t10 + t11 - t4
- t6 + t8 - t9) + sin(t10 - t11 + t4 - t6 + t8 - t9) - sin(t10 - t11 +
t4 - t6 - t8 + t9) - sin(t10 - t11 - t4 + t6 + t8 - t9) + sin(t10 - t11
- t4 - t6 + t8 + t9)))/(r12*sin(t11 - t12)*(cos(t10 - t11 - t6 + t8 -
```

```
t9) - cos(t10 - t11 - t6 - t8 + t9) + cos(t10 + t11 - t6 + t8 - t9) -
cos(t10 + t11 - t6 - t8 + t9)))

pretty(ans)


+-
-+
  |
r4 sin(t10 - t4)
|
  |
----------------
|
  |
r6 sin(t10 - t6)
|
  |
|
  |
r4 (cos(t10 - t4 + t6 - t9) - cos(t10 - t4 - t6 + t9))
|
  |
-------------------------------------------------------
|
  |
r8 (cos(t10 - t6 + t8 - t9) - cos(t10 - t6 - t8 + t9))
|
  |
|
  |
r4 (cos(t10 - t4 + t6 - t8) - cos(t10 - t4 - t6 + t8))
|
  |
-------------------------------------------------------
|
  |
r9 (cos(t10 - t6 + t8 - t9) - cos(t10 - t6 - t8 + t9))
|
  |
|
  |
r4 sin(t4 - t6)
|
  |
-----------------
|
  |
r10 sin(t10 - t6)
|
  |
|
```

```
  |         r4 (sin(t10 + t12 - t4 + t6 - t8 - t9) - sin(t10 + t12 - t4
- t6 + t8 - t9) + sin(t10 - t12 + t4 - t6 + t8 - t9) - sin(t10 - t12 +
t4 - t6 - t8 + t9) - sin(t10 - t12 - t4 + t6 + t8 - t9) + sin(t10 - t12
- t4 - t6 + t8 + t9))      |
  |       - ------------------------------------------------------------
-----------------------------------------------------------------------


-----------------------------------------------------------------------
------------------------      |
  |                                            r11 (sin(t10 + t11 - t12
- t6 + t8 - t9) - sin(t10 + t11 - t12 - t6 - t8 + t9) - sin(t10 - t11 +
t12 - t6 + t8 - t9) + sin(t10 - t11 + t12 - t6 - t8 + t9))
|
  |
|
  |    r4 cos(t11) (sin(t10 + t11 - t4 + t6 - t8 - t9) - sin(t10 + t11
- t4 - t6 + t8 - t9) + sin(t10 - t11 + t4 - t6 + t8 - t9) - sin(t10 -
t11 + t4 - t6 - t8 + t9) - sin(t10 - t11 - t4 + t6 + t8 - t9) + sin(t10
- t11 - t4 - t6 + t8 + t9))  |
  |  - ------------------------------------------------------------------
-----------------------------------------------------------------------
-----------------------------------------------------------------------
---------------------------  |
  |                                                 r12 sin(t11 - t12)
(cos(t10 - t11 - t6 + t8 - t9) - cos(t10 - t11 - t6 - t8 + t9) +
cos(t10 + t11 - t6 + t8 - t9) - cos(t10 + t11 - t6 - t8 + t9))
|
  +-
-+
```

APPENDIX B: LICENSE TERMS

JOHN WILEY AND SONS LICENSE
TERMS AND CONDITIONS

Feb 20, 2012

This is a License Agreement between Joseph E Pishnery ("You") and John Wiley and Sons ("John Wiley and Sons") provided by Copyright Clearance Center ("CCC"). The license consists of your order details, the terms and conditions provided by John Wiley and Sons, and the payment terms and conditions.

All payments must be made in full to CCC. For payment instructions, please see information listed at the bottom of this form.

License Number	2834870397862
License date	Jan 23, 2012
Licensed content publisher	John Wiley and Sons
Licensed content publication	Wiley Books
Licensed content title	Compliant Mechanisms
Licensed content author	Larry L. Howell
Licensed content date	Aug 1, 2001
Type of use	Dissertation/Thesis
Requestor type	University/Academic
Format	Print and electronic
Portion	Figure/table
Number of figures/tables	10
Original Wiley figure/table number(s)	Figure 1.2 Table 5.1 Table 5.2 Table 5.3 Figure 5.6 Figure 5.26 Figure 10.1 Figure 10.2 Table 10.1
Will you be translating?	No
Order reference number	

TERMS AND CONDITIONS

PURPOSE, USABILITY, INTEGRATION OR NON-INFRINGEMENT AND ALL SUCH WARRANTIES ARE HEREBY EXCLUDED BY WILEY AND ITS LICENSORS AND WAIVED BY YOU.

6. WILEY shall have the right to terminate this Agreement immediately upon breach of this Agreement by you.

7. You shall indemnify, defend and hold harmless WILEY, its Licensors and their respective directors, officers, agents and employees, from and against any actual or threatened claims, demands, causes of action or proceedings arising from any breach of this Agreement by you.

8. IN NO EVENT SHALL WILEY OR ITS LICENSORS BE LIABLE TO YOU OR ANY OTHER PARTY OR ANY OTHER PERSON OR ENTITY FOR ANY SPECIAL, CONSEQUENTIAL, INCIDENTAL, INDIRECT, EXEMPLARY OR PUNITIVE DAMAGES, HOWEVER CAUSED, ARISING OUT OF OR IN CONNECTION WITH THE DOWNLOADING, PROVISIONING, VIEWING OR USE OF THE MATERIALS REGARDLESS OF THE FORM OF ACTION, WHETHER FOR BREACH OF CONTRACT, BREACH OF WARRANTY, TORT, NEGLIGENCE, INFRINGEMENT OR OTHERWISE (INCLUDING, WITHOUT LIMITATION, DAMAGES BASED ON LOSS OF PROFITS, DATA, FILES, USE, BUSINESS OPPORTUNITY OR CLAIMS OF THIRD PARTIES), AND WHETHER OR NOT THE PARTY HAS BEEN ADVISED OF THE POSSIBILITY OF SUCH DAMAGES. THIS LIMITATION SHALL APPLY NOTWITHSTANDING ANY FAILURE OF ESSENTIAL PURPOSE OF ANY LIMITED REMEDY PROVIDED HEREIN.

9. Should any provision of this Agreement be held by a court of competent jurisdiction to be illegal, invalid, or unenforceable, that provision shall be deemed amended to achieve as nearly as possible the same economic effect as the original provision, and the legality, validity and enforceability of the remaining provisions of this Agreement shall not be affected or impaired thereby.

10. The failure of either party to enforce any term or condition of this Agreement shall not constitute a waiver of either party's right to enforce each and every term and condition of this Agreement. No breach under this agreement shall be deemed waived or excused by either party unless such waiver or consent is in writing signed by the party granting such waiver or consent. The waiver by or consent of a party to a breach of any provision of this Agreement shall not operate or be construed as a waiver of or consent to any other or subsequent breach by such other party.

11. This Agreement may not be assigned (including by operation of law or otherwise) by you without WILEY's prior written consent.

12. Any fee required for this permission shall be non-refundable after thirty (30) days from receipt.

13. These terms and conditions together with CCC’s Billing and Payment terms and conditions (which are incorporated herein) form the entire agreement between you and WILEY concerning this licensing transaction and (in the absence of fraud) supersedes all prior agreements and representations of the parties, oral or written. This Agreement may not be amended except in writing signed by both parties. This Agreement shall be binding upon and inure to the benefit of the parties' successors, legal representatives, and authorized assigns.

14. In the event of any conflict between your obligations established by these terms and

conditions and those established by CCC's Billing and Payment terms and conditions, these

terms and conditions shall prevail.

15. WILEY expressly reserves all rights not specifically granted in the combination of (i) the license details provided by you and accepted in the course of this licensing transaction, (ii) these terms and conditions and (iii) CCC's Billing and Payment terms and conditions.

16. This Agreement will be void if the Type of Use, Format, Circulation, or Requestor Type was misrepresented during the licensing process.

17. This Agreement shall be governed by and construed in accordance with the laws of the State of New York, USA, without regards to such state's conflict of law rules. Any legal action, suit or proceeding arising out of or relating to these Terms and Conditions or the breach thereof shall be instituted in a court of competent jurisdiction in New York County in the State of New York in the United States of America and each party hereby consents and submits to the personal jurisdiction of such court, waives any objection to venue in such court and consents to service of process by registered or certified mail, return receipt requested, at the last known address of such party.

Wiley Open Access Terms and Conditions

All research articles published in Wiley Open Access journals are fully open access: immediately freely available to read, download and share. Articles are published under the terms of the Creative Commons Attribution Non Commercial License. which permits use, distribution and reproduction in any medium, provided the original work is properly cited and is not used for commercial purposes. The license is subject to the Wiley Open Access terms and conditions: Wiley Open Access articles are protected by copyright and are posted to repositories and websites in accordance with the terms of the Creative Commons Attribution Non Commercial License. At the time of deposit, Wiley Open Access articles include all changes made during peer review, copyediting, and publishing. Repositories and websites that host the article are responsible for incorporating any publisher-supplied amendments or retractions issued subsequently.
Wiley Open Access articles are also available without charge on Wiley's publishing platform,**Wiley Online Library** or any successor sites.

Use by non-commercial users

For non-commercial and non-promotional purposes individual users may access, download, copy, display and redistribute to colleagues Wiley Open Access articles, as well as adapt, translate, text- and data-mine the content subject to the following conditions:

- The authors' moral rights are not compromised. These rights include the right of "paternity" (also known as "attribution" - the right for the author to be identified as such) and "integrity" (the right for the author not to have the work altered in such a way that the author's reputation or integrity may be impugned).• Where content in the article is identified as belonging to a third party, it is

the obligation of the user to ensure that any reuse complies with the copyright policies of the owner of that content.

- If article content is copied, downloaded or otherwise reused for non-commercial research and education purposes, a link to the appropriate bibliographic citation (authors, journal, article title, volume, issue, page numbers, DOI and the link to the definitive published version on Wiley Online Library) should be maintained. Copyright notices and disclaimers must not be deleted.

- Any translations, for which a prior translation agreement with Wiley has not been agreed, must prominently display the statement: "This is an unofficial translation of an article that appeared in a Wiley publication. The publisher has not endorsed this translation."

Use by commercial "for-profit" organisations

Use of Wiley Open Access articles for commercial, promotional, or marketing purposes requires further explicit permission from Wiley and will be subject to a fee. Commercial purposes include:

- Copying or downloading of articles, or linking to such articles for further redistribution, sale or licensing;
- Copying, downloading or posting by a site or service that incorporates advertising with such content;

- The inclusion or incorporation of article content in other works or services (other than normal quotations with an appropriate citation) that is then available for sale or licensing, for a fee (for example, a compilation produced for marketing purposes, inclusion in a sales pack)

- Use of article content (other than normal quotations with appropriate citation) by for-profit organisations for promotional purposes

- Linking to article content in e-mails redistributed for promotional, marketing or educational purposes;

- Use for the purposes of monetary reward by means of sale, resale, licence, loan, transfer or other form of commercial exploitation such as marketing products

Other Terms and Conditions:

BY CLICKING ON THE "I AGREE..." BOX, YOU ACKNOWLEDGE THAT YOU HAVE READ AND FULLY UNDERSTAND EACH OF THE SECTIONS OF AND PROVISIONS SET FORTH IN THIS AGREEMENT AND THAT YOU ARE IN AGREEMENT WITH AND ARE WILLING TO ACCEPT ALL OF YOUR OBLIGATIONS AS SET FORTH IN THIS AGREEMENT.